1. List of functions

Category	Function	ARNU09GVEA2, ARNU12GVEA2, URNU18GVJA2 URNU24GVJA2, URNU48GVLA2
Air flow	Air supply outlet	1
	Airflow direction control(left & right)	Manual
	Airflow direction control(up & down)	Auto
	Auto swing(left & right)	X
	Auto swing(up & down)	O
	Airflow steps(fan/cool/heat)	3 / 4 / 3
	Chaos swing	X
	Chaos wind(auto wind)	O
	Jet cool(Power wind)	O
	Swirl wind	-
Air purifying	Deodorizing filter	X
	Plasma air purifier	X
	Prefilter(washable / anti-fungus)	O
Installation	Drain pump	X
	E.S.P. control	X
	Electric heater(operation)	X
	High ceiling operation	O
Reliability	Hot start	O
	Self diagnosis	O
	Soft dry operation	O
Convenience	Auto changeover	O(Heat recovery)
	Auto cleaning	X
	Auto operation(artificial intelligence)	O(Heat pump or Cooling only)
	Auto restart operation	O
	Child lock	O
	Forced operation	O
	Group control	O
	Sleep mode	O
	Timer(on/off)	O
	Timer(weekly)	O
	Two thermistor control	O
Individual control	Wide wired remote controller	Accessory
	Deluxe wired remote controller	Accessory
	Simple wired remote controller	Accessory
	Wired remote controller(for hotel use)	Accessory
	Wireless remote controller(simple)	X
	Wireless LCD remote control	Accessory
Special function kit	Zone control	-
	CTIE	-
	Electro thermostat	-

O : Applied X : Not applied – : No relation

Option : Model name & price are different according to options, and assembled in factory with main unit.

Accessory : Installed at field, ordered and purchased separately by the corresponding model name, supplied with separate package.

2. Specifications

Type			Ceiling & Floor	
Model		Unit	ARNU09GVEA2	ARNU12GVEA2
Cooling Capacity		kW	2.8	3.6
		kcal/h	2,400	3,100
		Btu/h	9,600	12,300
Heating Capacity		kW	3.2	4.0
		kcal/h	2,800	3,400
		Btu/h	10,900	13,600
Casing			-	-
Dimensions(WxHxD)	Body	mm	900 x 490 x 200	900 x 490 x 200
		inch	35-7/16 x 19-9/32 x 7-7/8	35-7/16 x 19-9/32 x 7-7/8
Coil	Rows x Columns x FPI		2 x 12 x 20	2 x 12 x 20
	Face Area	m^3	0.10	0.10
Fan	Type		Cross Flow Fan	Cross Flow Fan
	Motor Output x Number	W	27	27
	Running Current	A	0.15	0.15
	Air Flow Rate(H / M / L)	CMM	7.6 / 6.9 / 6.2	9.2 / 7.6 / 6.9
		cfm	268 / 243 / 219	325 / 268 / 244
	Drive		Direct	Direct
	Motor type		BLDC	BLDC
Temperature Control			Microprocessor, Thermostat for cooling and heating	Microprocessor, Thermostat for cooling and heating
Sound Absorbing Thermal Insulation Material			Foamed polystrene	Foamed polystrene
Safety Device			Fuse	Fuse
Pipe Connections	Liquid Side	mm(inch)	Ø6.35(1/4)	Ø6.35(1/4)
	Gas Side	mm(inch)	Ø12.7(1/2)	Ø12.7(1/2)
	Drain Pipe(Internal Dia.)	mm(inch)	16(5/8)	16(5/8)
Net Weight		kg(lbs)	13.7(30.2)	13.7(30.2)
Noise Level(Sound Press, 1m, H / M / L)		dB(A)	36 / 32 / 28	38 / 36 / 30
Power Supply		Ø, V, Hz	1, 220-240, 50	1, 220-240, 50
			1, 220, 60	1, 220, 60
Refrigerant Control			EEV	EEV
Power cable		mm^2	CV1.5 x 3C	CV1.5 x 3C
Transmission cable		mm^2	CVV-SB 1.0~1.5 x 2C	CVV-SB 1.0~1.5 x 2C
Color			Morning fog	Morning fog

Notes:-

1. Capacities are based on the following conditions:
   - Cooling
     - Indoor temp. 27°C[80.6°F]DB/ 19°C[66.2°F]WB
     - Outdoor temp. 35°C[95°F]DB/ 24°C[75.2°F]WB
     - Interconnecting Piping Length 7.5m
     - Level Difference of Zero
   - Heating
     - Indoor temp. 20°C[68°F]DB/ 15°C[59°F]WB
     - Outdoor temp. 7°C[44.6°F]DB/ 6°C[42.8°F]WB
     - Interconnecting Piping Length 7.5m
     - Level Difference of Zero
2. Capacities are net capacities
3. Due to our policy of innovation some specifications may be changed without prior notification
4. To be added for more available Models
5. EEV : Electronic Expansion Valve
6. Anechoic chamber conversion value is measured at 1 m downward from unit centre.
   The values depends on the ambient conditions and values are normally higher in actual operation.

Conversion Formula
kcal/h= kW x 860
Btu/h = kW x 3412
cfm = m^3/min x 35.3
l/s = CMM x 1000/60

2. Specifications

Type			Ceiling Suspended	
Model		Unit	URNU18GVJA2	URNU24GVJA2
Cooling Capacity		kW	5.6	7.1
		kcal/h	4,800	6,100
		Btu/h	19,100	24,200
Heating Capacity		kW	6.3	8.0
		kcal/h	5,400	6,900
		Btu/h	21,500	27,300
Casing			Galvanized Steel Plate+Painting	Galvanized Steel Plate+Painting
Dimensions(WxHxD)	Body	mm	950 x 650 x 220	950 x 650 x 220
		inch	37-13/32 x 25-19/32 x 8-21/32	37-13/32 x 25-19/32 x 8-21/32
Coil	Rows x Columns x FPI		3 x 14 x 19	3 x 14 x 19
	Face Area	m^3	0.23	0.23
Fan	Type		Sirocco Fan	Sirocco Fan
	Motor Output x Number	W	60	60
	Running Current	A	0.30	0.30
	Air Flow Rate(H / M / L)	CMM	16.0 / 14.0 /12.0	18.0 / 16.0 / 14.0
		cfm	565 / 495 / 424	636 / 565 / 495
	Drive		Direct	Direct
	Motor type		BLDC	BLDC
Temperature Control			Microprocessor, Thermostat for cooling and heating	Microprocessor, Thermostat for cooling and heating
Sound Absorbing Thermal Insulation Material			Foamed polystrene	Foamed polystrene
Safety Device			Fuse	Fuse
Pipe Connections	Liquid Side	mm(inch)	Ø6.35(1/4)	Ø9.52(3/8)
	Gas Side	mm(inch)	Ø12.7(1/2)	Ø15.88(5/8)
	Drain Pipe(Internal Dia.)	mm(inch)	16(5/8)	16(5/8)
Net Weight		kg(lbs)	24.6(54.2)	24.6(54.2)
Noise Level(Sound Press, 1m, H / M / L)		dB(A)	42 / 40 / 37	43 / 41 / 39
Power Supply		Ø, V, Hz	1, 220-240, 50	1, 220-240, 50
			1, 220, 60	1, 220, 60
Refrigerant Control			EEV	EEV
Power cable		mm^2	CV1.5 x 3C	CV1.5 x 3C
Transmission cable		mm^2	CVV-SB 1.0~1.5 x 2C	CVV-SB 1.0~1.5 x 2C
Color			Morning fog	Morning fog

Notes:-

1. Capacities are based on the following conditions:
   - Cooling
     - Indoor temp. 27°C[80.6°F]DB/ 19°C[66.2°F]WB
     - Outdoor temp. 35°C[95°F]DB/ 24°C[75.2°F]WB
     - Interconnecting Piping Length 7.5m
     - Level Difference of Zero
   - Heating
     - Indoor temp. 20°C[68°F]DB/ 15°C[59°F]WB
     - Outdoor temp. 7°C[44.6°F]DB/ 6°C[42.8°F]WB
     - Interconnecting Piping Length 7.5m
     - Level Difference of Zero
2. Capacities are net capacities
3. Due to our policy of innovation some specifications may be changed without prior notification
4. To be added for more available Models
5. EEV : Electronic Expansion Valve
6. Anechoic chamber conversion value is measured at 1 m downward from unit centre.
   The values depends on the ambient conditions and values are normally higher in actual operation.

Conversion Formula
kcal/h= kW x 860
Btu/h = kW x 3412
cfm = m^3/min x 35.3
l/s = CMM x 1000/60

2. Specifications

Type			Ceiling Suspended
Model		Unit	URNU48GVLA2
Cooling Capacity		kW	14.1
		kcal/h	12,100
		Btu/h	48,100
Heating Capacity		kW	15.9
		kcal/h	13,200
		Btu/h	51,200
Casing			Galvanized Steel Plate
Dimensions(WxHxD)	Body	mm	1750 x 650 x 220
		inch	68-29/32 x 25-19/32 x 8-21/32
Coil	Rows x Columns x FPI		3 x 14 x 17
	Face Area	m^3	0.42
Fan	Type		Sirocco Fan
	Motor Output x Number	W	81*2
	Running Current	A	0.88
	Air Flow Rate(H / M / L)	CMM	35 / 32 / 30
		cfm	1236 / 1130 / 1060
	Drive		Direct
	Motor type		BLDC
Temperature Control			Microprocessor, Thermostat for cooling and heating
Sound Absorbing Thermal Insulation Material			Foamed polystrene
Safety Device			Fuse
Pipe Connections	Liquid Side	mm(inch)	Ø9.52(3/8)
	Gas Side	mm(inch)	Ø15.88(5/8)
	Drain Pipe(Internal Dia.)	mm(inch)	16(5/8)
Net Weight		kg(lbs)	45(99.2)
Noise Level(Sound Press, 1m, H / M / L)		dB(A)	49 / 48 / 47
Power Supply		Ø, V, Hz	1, 220 ~ 240, 50
			1, 220, 60
Refrigerant Control			EEV
Power cable		mm^2	CV1.5 x 3C
Transmission cable		mm^2	VCTF-SB 1.0 ~ 1.5 x 2C
Color			Morning fog

Notes:-

1. Capacities are based on the following conditions:
   - Cooling
     - Indoor temp. 27°C[80.6°F]DB/ 19°C[66.2°F]WB
     - Outdoor temp. 35°C[95°F]DB/ 24°C[75.2°F]WB
     - Interconnecting Piping Length 7.5m
     - Level Difference of Zero
   - Heating
     - Indoor temp. 20°C[68°F]DB/ 15°C[59°F]WB
     - Outdoor temp. 7°C[44.6°F]DB/ 6°C[42.8°F]WB
     - Interconnecting Piping Length 7.5m
     - Level Difference of Zero
2. Capacities are net capacities
3. Due to our policy of innovation some specifications may be changed without prior notification
4. To be added for more available Models
5. EEV : Electronic Expansion Valve
6. Anechoic chamber conversion value is measured at 1 m downward from unit centre.
   The values depends on the ambient conditions and values are normally higher in actual operation.

Conversion Formula
kcal/h= kW x 860
Btu/h = kW x 3412
cfm = m^3/min x 35.3
l/s = CMM x 1000/60

Ceiling & Floor

ARNU09GVEA2
ARNU12GVEA2

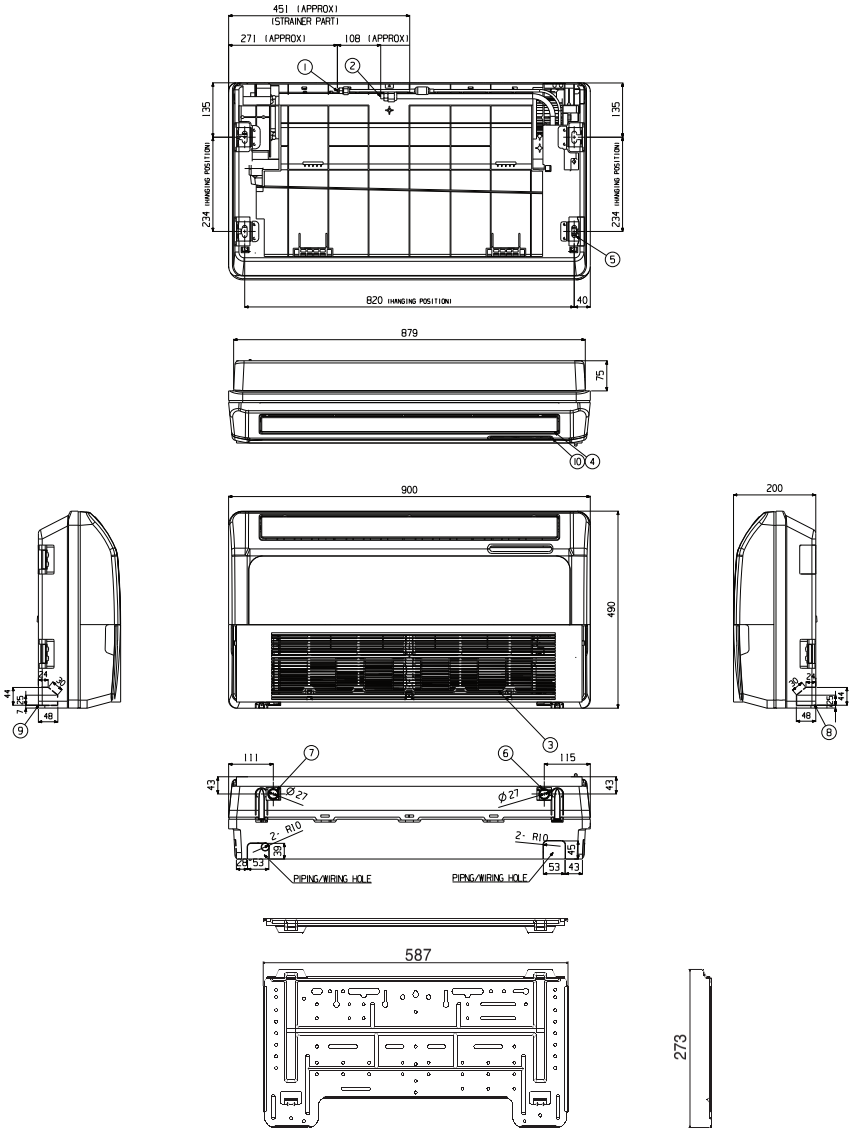

(unit : mm)

Model	W	H	D
ARNU09GVEA2 ARNU12GVEA2	900	490	200

(unit : mm)

Number	Name	Descripition
1	Liquid pipe	ø6.35 Flare connection
2	Gas pipe	ø12.7 Flare connection
3	Suction gille	
4	Discharge grille	
5	Suspension bracket	
6	Right side drain hose hole	
7	Left side drain hose hole	
8	Wiring connection	Slit hole
9	Piping connection	Slit hole
10	Signal receiver & Operation indicator	

▣ Note
1. Unit should be installed in compliance with the installation manual in the product box.
2. Unit shall be grounded in accordance with the local regulations or applicable national codes.

※ Required space(unit:mm)

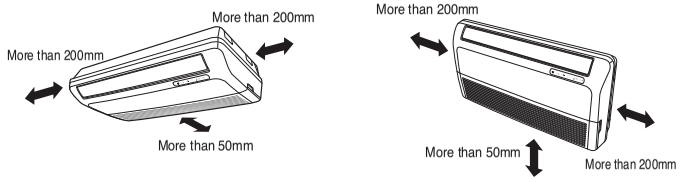

LG Electronics
76, Seongsan-dong, Changwon City, Gyeongnam,
641-713, Korea

CHASSIS CODE: VE

3. Dimensions

Ceiling Suspended

URNU18GVJA2
URNU24GVJA2

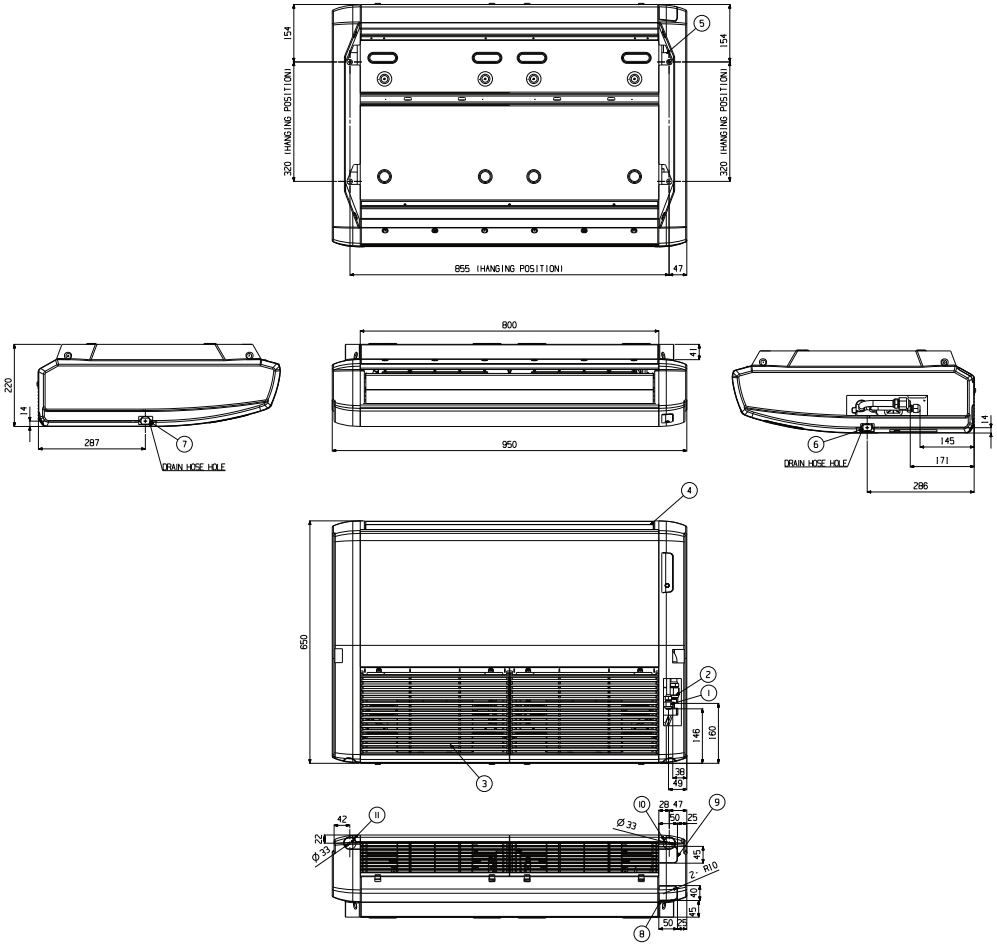

(unit : mm)

Model	W	H	D
URNU18GVJA2 URNU24GVJA2	950	650	220

(unit : mm)

Number	Name	Descripition
1	Liquid pipe	ø6.35 Flare connection
2	Gas pipe	ø12.7 Flare connection
3	Suction gille	
4	Discharge grille	
5	Suspension bracket	
6	Right side drain hose hole	
7	Left side drain hose hole	
8	Wiring connection	Slit hole
9	Piping connection	Slit hole
10	Right side drain pipe connection	Slit hole
11	Left side drain pipe connection	Slit hole

■ Note

1. Unit should be installed in compliance with the installation manual in the product box.
2. Unit shall be grounded in accordance with the local regulations or applicable national codes.

※ Required space(unit:mm)

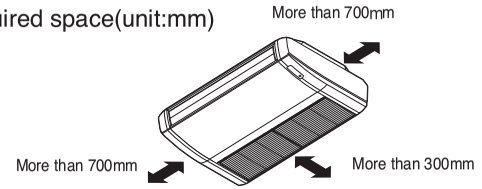

LG Electronics

76, Seongsan-dong, Changwon City, Gyeongnam,
641-713, Korea

CHASSIS CODE: VJ

3. Dimensions

Ceiling Suspended

URNU48GVLA2

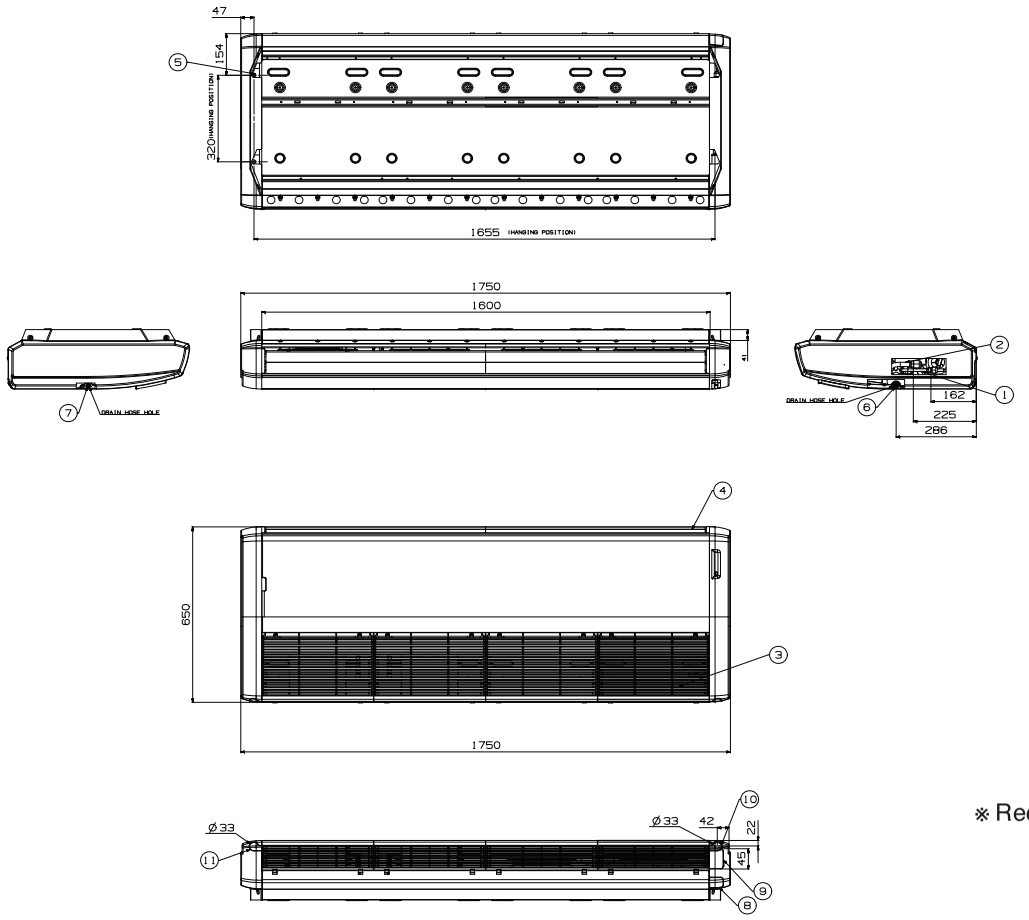

(unit : mm)

Model	W	H	D
URNU48GVLA2	1750	650	220

(unit : mm)

Number	Name	Descripition
1	Liquid pipe	ø9.52 Flare connection
2	Gas pipe	ø15.88 Flare connection
3	Suction gille	
4	Discharge grille	
5	Suspension bracket	
6	Right side drain hose hole	
7	Left side drain hose hole	
8	Wiring connection	Slit hole
9	Piping connection	Slit hole
10	Right side drain pipe connection	Slit hole
11	Left side drain pipe connection	Slit hole

▣ Note

1. Unit should be installed in compliance with the installation manual in the product box.
2. Unit shall be grounded in accordance with the local regulations or applicable national codes.

※ Required space(unit:mm)

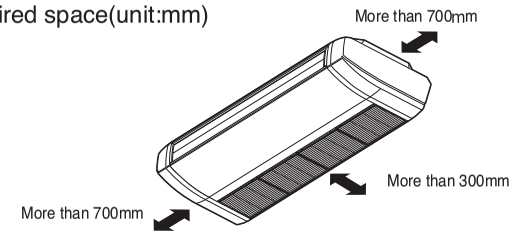

LG Electronics

76, Seongsan-dong, Changwon City, Gyeongnam, 641-713, Korea

CHASSIS CODE: VL

4. Piping Diagrams

VE Chassis

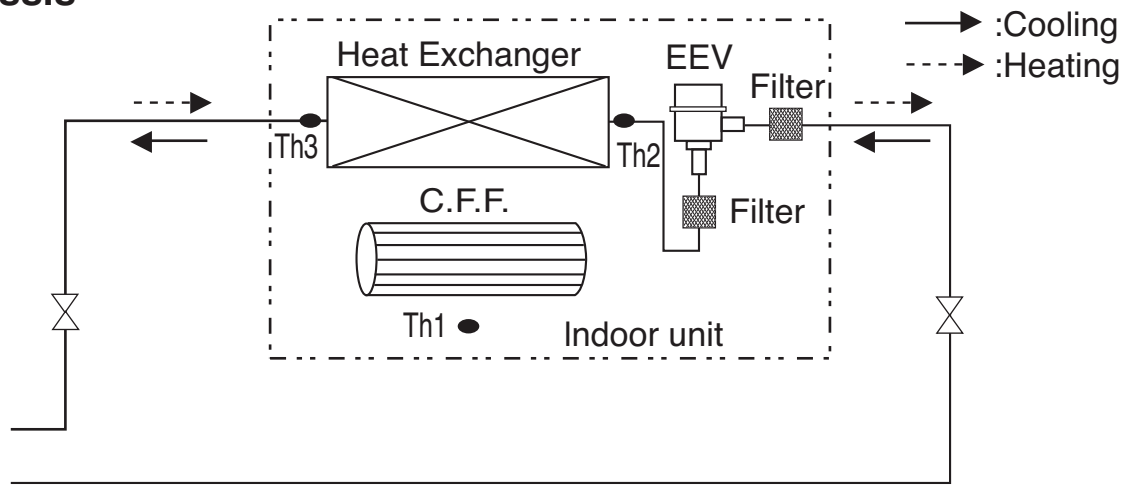

VJ Chassis

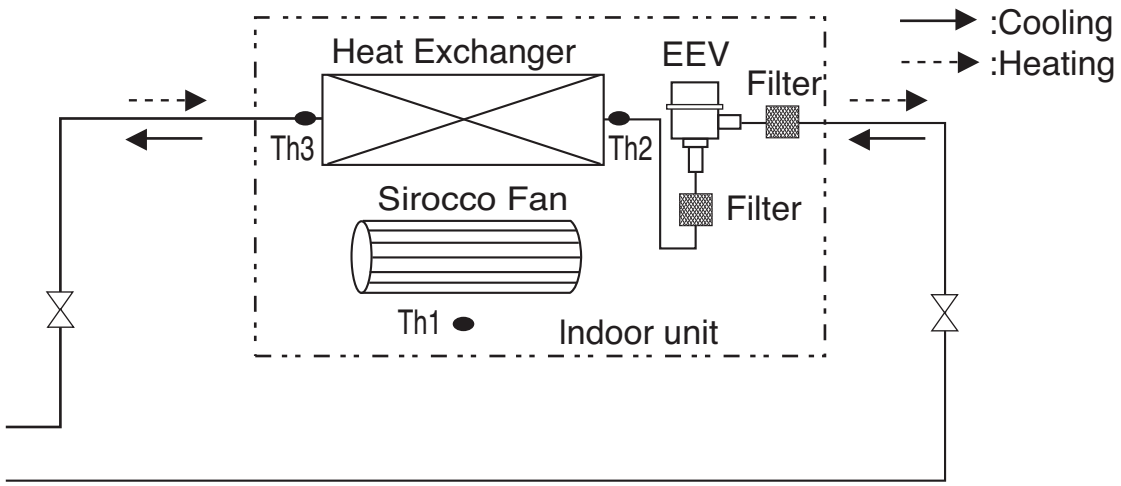

Refrigerant pipe connection port diameter

[Unit: mm(inch)]

Model	Gas	Liquid
ARNU09GVEA2	Ø12.7(1/2)	Ø6.35(1/4)
ARNU12GVEA2	Ø12.7(1/2)	Ø6.35(1/4)
URNU18GVJA2	Ø12.7(1/2)	Ø6.35(1/4)
URNU24GVJA2	Ø15.88(5/8)	Ø9.52(3/8)

LOC.	Description
Th1	Room thermistor
Th2	Pipe in thermistor
Th3	Pipe out thermistor

4. Piping Diagrams

VL Chassis

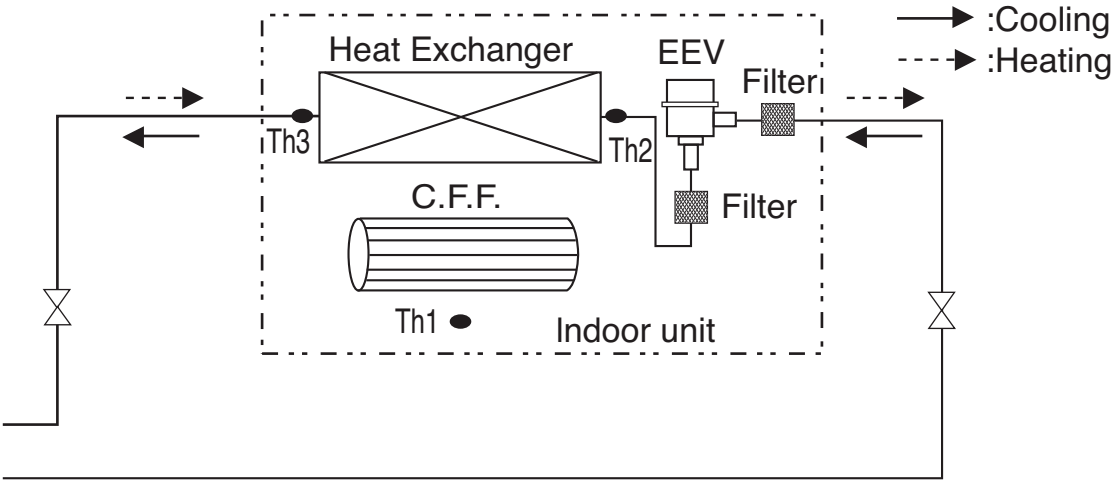

Refrigerant pipe connection port diameter

Model	Gas	Liquid
URNU48GVLA2	Ø15.88(5/8)	Ø9.52(3/8)

LOC.	Description
Th1	Room thermistor
Th2	Pipe in thermistor
Th3	Pipe out thermistor

5. Wiring Diagrams

VE Chassis

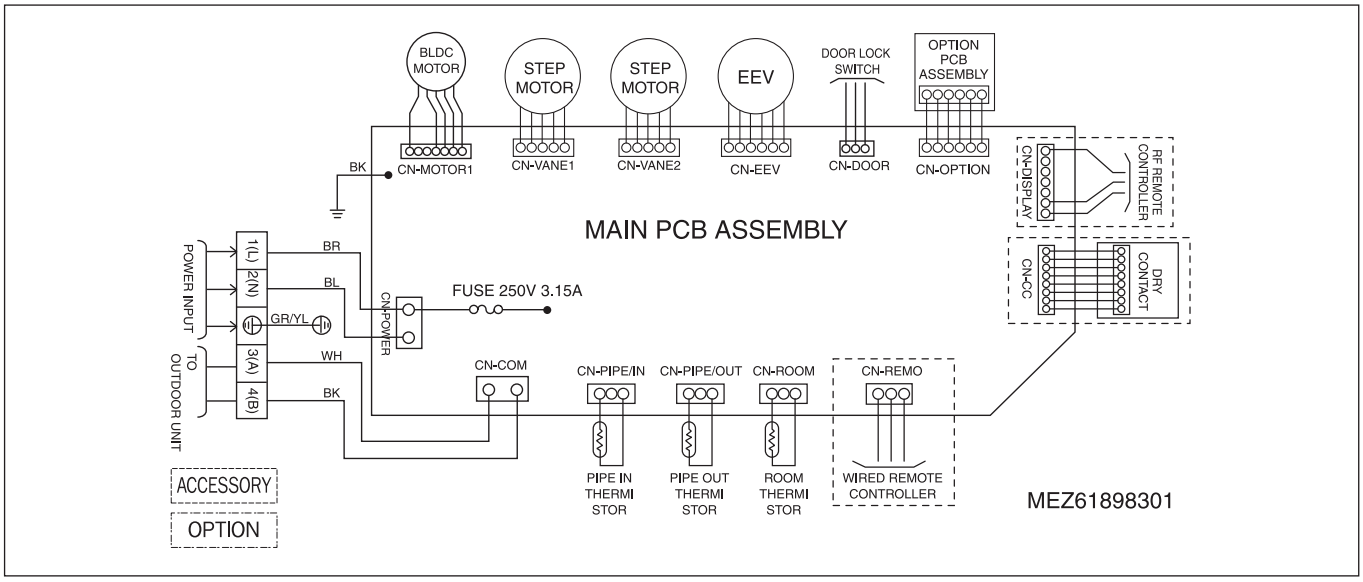

CONNECTOR NUMBER	SPEC.	DESCRIPTION
CN-POWER	AC power supply	AC power line input for indoor controller
CN-MOTOR1	Fan motor output	Motor output of BLDC
CN-MOTOR2	Fan motor output	Motor output of BLDC
CN-PIPE/OUT	Discharge pipe sensor	Pipe out thermistor
CN-PIPE/IN	Suction pipe sensor	Pipe in thermistor
CN-ROOM	Room sensor	Room thermistor
CN-REMO	Remote controller	Remote control line
CN-FLOAT	Float switch input	Float switch sensing
CN-EEV	EEV output	EEV Control output
CN-OPTION	Option pwb.	Communication between main and option
CN-COM	Communication	Communication between indoor and outdoor
CN-D/PUMP	Drain pump output	AC Output for drain pump
CN-POWER	AC power supply	AC Power line input for indoor controller
CN-DISPLAY	Display wire	Display wire line
CN-DOOR	Door lock switch	Door lock switch line
CN-CC	Dry contact	Dry contact line

Dip Switch Setting		Off	On	Remarks
SW3	GROUP	Master	Slave	Group Control setting using Wired Remote Controller
SW4	DRY CONTACT	Variable	Auto	Old Dry Contact Mode Setting 1. Variable : Auto/Manual Mode can be chosen by Wide wired remote controller or Wireless remote controller (When shipped from Factory → Manual Mode) 2. Auto : For Dry Contact, it is always Auto mode.
SW5	EXTRA 1	Off	On	1. Duct model -. OFF : Default(not operate continuosly) -. ON : Fan operate continuosly 2. Cassette Model : No Function 3. Ceiling Suspended Model -. OFF : Ceiling(default) -. ON : Floor

⚠ CAUTION

For Multi V Model, Dip Switch 1,2,6,7,8 must be set OFF
That dip switch is used for the other model.

5. Wiring Diagrams

VJ Chassis

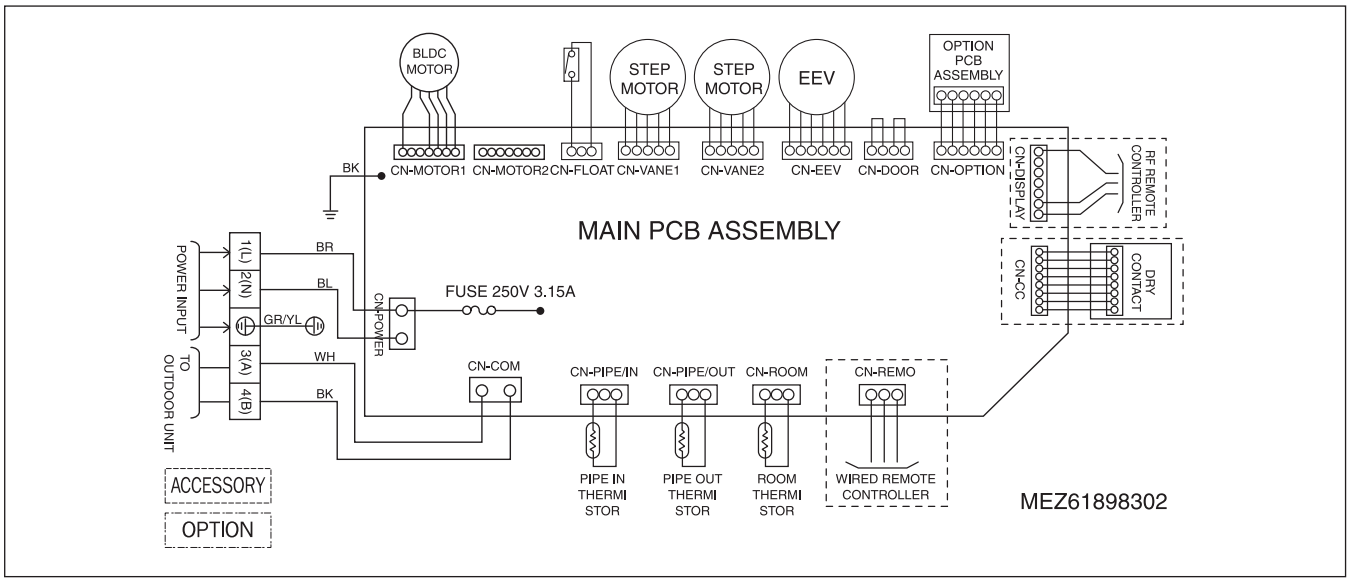

CONNECTOR NUMBER	SPEC.	DESCRIPTION
CN-POWER	AC power supply	AC power line input for indoor controller
CN-MOTOR1	Fan motor output	Motor output of BLDC
CN-MOTOR2	Fan motor output	Motor output of BLDC
CN-PIPE/OUT	Discharge pipe sensor	Pipe out thermistor
CN-PIPE/IN	Suction pipe sensor	Pipe in thermistor
CN-ROOM	Room sensor	Room thermistor
CN-REMO	Remote controller	Remote control line
CN-FLOAT	Float switch input	Float switch sensing
CN-EEV	EEV output	EEV Control output
CN-OPTION	Option pwb.	Communication between main and option
CN-COM	Communication	Communication between indoor and outdoor
CN-D/PUMP	Drain pump output	AC Output for drain pump
CN-POWER	AC power supply	AC Power line input for indoor controller
CN-DISPLAY	Display wire	Display wire line
CN-DOOR	Door lock switch	Door lock switch line
CN-CC	Dry contact	Dry contact line

Dip Switch Setting		Off	On	Remarks
SW3	GROUP	Master	Slave	Group Control setting using Wired Remote Controller
SW4	DRY CONTACT	Variable	Auto	Old Dry Contact Mode Setting 1. Variable : Auto/Manual Mode can be chosen by Wide wired remote controller or Wireless remote controller (When shipped from Factory → Manual Mode) 2. Auto : For Dry Contact, it is always Auto mode.
SW5	EXTRA 1	Off	On	1. Duct model -. OFF : Default(not operate continuosly) -. ON : Fan operate continuosly 2. Cassette Model : No Function 3. Ceiling Suspended Model -. OFF : Ceiling(default) -. ON : Floor

⚠ CAUTION

For Multi V Model, Dip Switch 1,2,6,7,8 must be set OFF
That dip switch is used for the other model.

5. Wiring Diagrams

VL Chassis

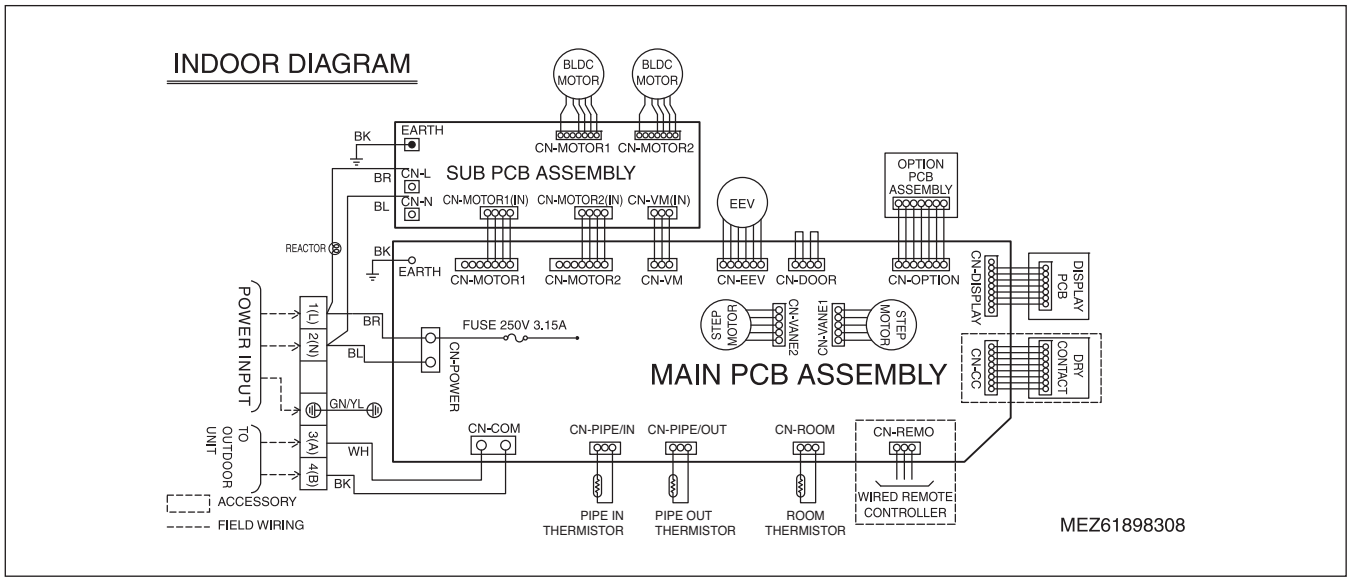

CONNECTOR NUMBER	SPEC.	DESCRIPTION
CN-POWER	AC power supply	AC power line input for indoor controller
CN-MOTOR1	Fan motor output	Motor output of BLDC
CN-MOTOR2	Fan motor output	Motor output of BLDC
CN-PIPE/OUT	Discharge pipe sensor	Pipe out thermistor
CN-PIPE/IN	Suction pipe sensor	Pipe in thermistor
CN-ROOM	Room sensor	Room thermistor
CN-REMO	Remote controller	Remote control line
CN-EEV	EEV output	EEV Control output
CN-OPTION	Option pwb.	Communication between main and option
CN-COM	Communication	Communication between indoor and outdoor
CN-POWER	AC power supply	AC Power line input for indoor controller
CN-DISPLAY	Display wire	Display wire line
CN-DOOR	Door lock switch	Door lock switch line
CN-CC	Dry contact	Dry contact line

Dip Switch Setting		Off	On	Remarks
SW3	GROUP	Master	Slave	Group Control setting using Wired Remote Controller
SW4	DRY CONTACT	Variable	Auto	Old Dry Contact Mode Setting 1. Variable : Auto/Manual Mode can be chosen by Wide wired remote controller or Wireless remote controller (When shipped from Factory → Manual Mode) 2. Auto : For Dry Contact, it is always Auto mode.
SW5	EXTRA 1	Off	On	1. Duct model -. OFF : Default(not operate continuosly) -. ON : Fan operate continuosly 2. Cassette Model : No Function 3. Ceiling Suspended Model -. OFF : Ceiling(default) -. ON : Floor

⚠ CAUTION

For Multi V Model, Dip Switch 1,2,6,7,8 must be set OFF
That dip switch is used for the other model.

6. Capacity Tables

6.1 Cooling Capacity

Cooling capacity

Capacity Index	Outdoor air temp. (DB, °C)	Indoor air temp. (DB/WB, °C)													
		20		23		26		27		28		30		32	
		14		16		18		19		20		22		24	
		TC	SHC	TC	SHC	TC	SHC	TC	SHC	TC	SHC	TC	SHC	TC	SHC
		kW	kW	kW	kW	kW	kW	kW	kW	kW	kW	kW	kW	kW	kW
2.8	10	1.9	1.6	2.3	1.8	2.6	2.0	2.8	2.0	3.0	2.0	3.4	2.1	3.7	2.1
	12	1.9	1.6	2.3	1.8	2.6	2.0	2.8	2.0	3.0	2.0	3.4	2.1	3.6	2.1
	14	1.9	1.6	2.3	1.8	2.6	2.0	2.8	2.0	3.0	2.0	3.4	2.1	3.6	2.1
	16	1.9	1.6	2.3	1.8	2.6	2.0	2.8	2.0	3.0	2.0	3.4	2.1	3.5	2.0
	18	1.9	1.6	2.3	1.8	2.6	2.0	2.8	2.0	3.0	2.0	3.4	2.1	3.5	2.0
	20	1.9	1.6	2.3	1.8	2.6	2.0	2.8	2.0	3.0	2.0	3.4	2.1	3.4	2.0
	21	1.9	1.6	2.3	1.8	2.6	2.0	2.8	2.0	3.0	2.0	3.4	2.1	3.4	2.0
	23	1.9	1.6	2.3	1.8	2.6	2.0	2.8	2.0	3.0	2.0	3.4	2.1	3.4	1.9
	25	1.9	1.6	2.3	1.8	2.6	2.0	2.8	2.0	3.0	2.0	3.3	2.1	3.3	1.9
	27	1.9	1.6	2.3	1.8	2.6	2.0	2.8	2.0	3.0	2.0	3.2	2.1	3.3	1.9
	29	1.9	1.6	2.3	1.8	2.6	2.0	2.8	2.0	3.0	2.0	3.2	2.0	3.2	1.9
	31	1.9	1.6	2.3	1.8	2.6	2.0	2.8	2.0	3.0	2.0	3.1	2.0	3.2	1.8
	33	1.9	1.6	2.3	1.8	2.6	2.0	2.8	2.0	3.0	2.0	3.1	2.0	3.1	1.8
	35	1.9	1.6	2.3	1.8	2.6	2.0	2.8	2.0	3.0	2.0	3.0	1.9	3.1	1.8
	37	1.9	1.6	2.3	1.8	2.6	2.0	2.8	2.0	2.9	2.0	3.0	1.9	3.0	1.8
	39	1.9	1.6	2.3	1.8	2.6	2.0	2.8	2.0	2.9	2.0	2.9	1.9	3.0	1.7
3.6	10	2.4	2.1	2.9	2.3	3.4	2.5	3.6	2.6	3.8	2.6	4.3	2.8	4.7	2.7
	12	2.4	2.1	2.9	2.3	3.4	2.5	3.6	2.6	3.8	2.6	4.3	2.8	4.7	2.7
	14	2.4	2.1	2.9	2.3	3.4	2.5	3.6	2.6	3.8	2.6	4.3	2.8	4.6	2.7
	16	2.4	2.1	2.9	2.3	3.4	2.5	3.6	2.6	3.8	2.6	4.3	2.8	4.6	2.6
	18	2.4	2.1	2.9	2.3	3.4	2.5	3.6	2.6	3.8	2.6	4.3	2.8	4.5	2.6
	20	2.4	2.1	2.9	2.3	3.4	2.5	3.6	2.6	3.8	2.6	4.3	2.8	4.4	2.5
	21	2.4	2.1	2.9	2.3	3.4	2.5	3.6	2.6	3.8	2.6	4.3	2.8	4.4	2.5
	23	2.4	2.1	2.9	2.3	3.4	2.5	3.6	2.6	3.8	2.6	4.3	2.8	4.3	2.5
	25	2.4	2.1	2.9	2.3	3.4	2.5	3.6	2.6	3.8	2.6	4.2	2.7	4.3	2.5
	27	2.4	2.1	2.9	2.3	3.4	2.5	3.6	2.6	3.8	2.6	4.1	2.6	4.2	2.4
	29	2.4	2.1	2.9	2.3	3.4	2.5	3.6	2.6	3.8	2.6	4.1	2.6	4.2	2.4
	31	2.4	2.1	2.9	2.3	3.4	2.5	3.6	2.6	3.8	2.6	4.0	2.6	4.1	2.4
	33	2.4	2.1	2.9	2.3	3.4	2.5	3.6	2.6	3.8	2.6	4.0	2.5	4.0	2.3
	35	2.4	2.1	2.9	2.3	3.4	2.5	3.6	2.6	3.8	2.6	3.9	2.5	4.0	2.3
	37	2.4	2.1	2.9	2.3	3.4	2.5	3.6	2.6	3.7	2.6	3.8	2.4	3.9	2.3
	39	2.4	2.1	2.9	2.3	3.4	2.5	3.6	2.6	3.7	2.5	3.7	2.4	3.8	2.2
5.6	10	3.8	3.3	4.5	3.7	5.2	4.0	5.6	4.0	6.0	4.2	6.7	4.3	7.4	4.3
	12	3.8	3.3	4.5	3.7	5.2	4.0	5.6	4.0	6.0	4.2	6.7	4.3	7.3	4.2
	14	3.8	3.3	4.5	3.7	5.2	4.0	5.6	4.0	6.0	4.2	6.7	4.3	7.2	4.2
	16	3.8	3.3	4.5	3.7	5.2	4.0	5.6	4.0	6.0	4.2	6.7	4.3	7.1	4.1
	18	3.8	3.3	4.5	3.7	5.2	4.0	5.6	4.0	6.0	4.2	6.7	4.3	7.0	4.1
	20	3.8	3.3	4.5	3.7	5.2	4.0	5.6	4.0	6.0	4.2	6.7	4.3	6.9	4.0
	21	3.8	3.3	4.5	3.7	5.2	4.0	5.6	4.0	6.0	4.2	6.7	4.3	6.8	4.0
	23	3.8	3.3	4.5	3.7	5.2	4.0	5.6	4.0	6.0	4.2	6.7	4.3	6.7	3.9
	25	3.8	3.3	4.5	3.7	5.2	4.0	5.6	4.0	6.0	4.2	6.6	4.3	6.6	3.9
	27	3.8	3.3	4.5	3.7	5.2	4.0	5.6	4.0	6.0	4.2	6.4	4.2	6.6	3.8
	29	3.8	3.3	4.5	3.7	5.2	4.0	5.6	4.0	6.0	4.2	6.4	4.1	6.5	3.8
	31	3.8	3.3	4.5	3.7	5.2	4.0	5.6	4.0	6.0	4.2	6.3	4.1	6.4	3.7
	33	3.8	3.3	4.5	3.7	5.2	4.0	5.6	4.0	6.0	4.2	6.2	4.0	6.3	3.7
	35	3.8	3.3	4.5	3.7	5.2	4.0	5.6	4.0	6.0	4.2	6.0	3.9	6.2	3.6
	37	3.8	3.3	4.5	3.7	5.2	4.0	5.6	4.0	5.8	4.1	5.9	3.8	6.1	3.6
	39	3.8	3.3	4.5	3.7	5.2	4.0	5.6	4.0	5.7	4.0	5.8	3.8	6.0	3.5

Notes:
TC: Total Capacity(kW)
SHC: Sensible Heat Capacity(kW)

6. Capacity Tables

Cooling capacity

Capacity Index	Outdoor air temp. (DB, °C)	Indoor air temp. (DB/WB, °C)													
		20		23		26		27		28		30		32	
		14		16		18		19		20		22		24	
		TC	SHC	TC	SHC	TC	SHC	TC	SHC	TC	SHC	TC	SHC	TC	SHC
		kW	kW	kW	kW	kW	kW	kW	kW	kW	kW	kW	kW	kW	kW
7.1	10	4.8	4.2	5.7	4.6	6.6	5.0	7.1	5.1	7.6	5.3	8.5	5.5	9.3	5.4
	12	4.8	4.2	5.7	4.6	6.6	5.0	7.1	5.1	7.6	5.3	8.5	5.5	9.2	5.4
	14	4.8	4.2	5.7	4.6	6.6	5.0	7.1	5.1	7.6	5.3	8.5	5.5	9.1	5.3
	16	4.8	4.2	5.7	4.6	6.6	5.0	7.1	5.1	7.6	5.3	8.5	5.5	9.0	5.2
	18	4.8	4.2	5.7	4.6	6.6	5.0	7.1	5.1	7.6	5.3	8.5	5.5	8.8	5.2
	20	4.8	4.2	5.7	4.6	6.6	5.0	7.1	5.1	7.6	5.3	8.5	5.5	8.7	5.1
	21	4.8	4.2	5.7	4.6	6.6	5.0	7.1	5.1	7.6	5.3	8.5	5.5	8.7	5.1
	23	4.8	4.2	5.7	4.6	6.6	5.0	7.1	5.1	7.6	5.3	8.5	5.5	8.5	5.0
	25	4.8	4.2	5.7	4.6	6.6	5.0	7.1	5.1	7.6	5.3	8.4	5.4	8.4	4.9
	27	4.8	4.2	5.7	4.6	6.6	5.0	7.1	5.1	7.6	5.3	8.2	5.3	8.3	4.9
	29	4.8	4.2	5.7	4.6	6.6	5.0	7.1	5.1	7.6	5.3	8.1	5.2	8.2	4.8
	31	4.8	4.2	5.7	4.6	6.6	5.0	7.1	5.1	7.6	5.3	8.0	5.1	8.1	4.7
	33	4.8	4.2	5.7	4.6	6.6	5.0	7.1	5.1	7.6	5.3	7.8	5.1	7.9	4.6
	35	4.8	4.2	5.7	4.6	6.6	5.0	7.1	5.1	7.6	5.3	7.7	5.0	7.8	4.6
	37	4.8	4.2	5.7	4.6	6.6	5.0	7.1	5.1	7.4	5.1	7.5	4.9	7.7	4.5
	39	4.8	4.2	5.7	4.6	6.6	5.0	7.1	5.1	7.2	5.0	7.4	4.8	7.6	4.4
14.1	10	9.5	8.4	11.3	9.2	13.1	10.0	14.1	10.2	15.1	10.6	16.9	10.9	18.5	10.7
	12	9.5	8.4	11.3	9.2	13.1	10.0	14.1	10.2	15.1	10.6	16.9	10.9	18.3	10.7
	14	9.5	8.4	11.3	9.2	13.1	10.0	14.1	10.2	15.1	10.6	16.9	10.9	18.1	10.6
	16	9.5	8.4	11.3	9.2	13.1	10.0	14.1	10.2	15.1	10.6	16.9	10.9	17.9	10.4
	18	9.5	8.4	11.3	9.2	13.1	10.0	14.1	10.2	15.1	10.6	16.9	10.9	17.5	10.4
	20	9.5	8.4	11.3	9.2	13.1	10.0	14.1	10.2	15.1	10.6	16.9	10.9	17.3	10.2
	21	9.5	8.4	11.3	9.2	13.1	10.0	14.1	10.2	15.1	10.6	16.9	10.9	17.3	10.2
	23	9.5	8.4	11.3	9.2	13.1	10.0	14.1	10.2	15.1	10.6	16.9	10.9	16.9	10.0
	25	9.5	8.4	11.3	9.2	13.1	10.0	14.1	10.2	15.1	10.6	16.7	10.7	16.7	9.8
	27	9.5	8.4	11.3	9.2	13.1	10.0	14.1	10.2	15.1	10.6	16.3	10.6	16.5	9.8
	29	9.5	8.4	11.3	9.2	13.1	10.0	14.1	10.2	15.1	10.6	16.1	10.4	16.3	9.6
	31	9.5	8.4	11.3	9.2	13.1	10.0	14.1	10.2	15.1	10.6	15.9	10.2	16.1	9.4
	33	9.5	8.4	11.3	9.2	13.1	10.0	14.1	10.2	15.1	10.6	15.5	10.2	15.7	9.2
	35	9.5	8.4	11.3	9.2	13.1	10.0	14.1	10.2	15.1	10.6	15.3	10.0	15.5	9.2
	37	9.5	8.4	11.3	9.2	13.1	10.0	14.1	10.2	14.7	10.2	14.9	9.8	15.3	9.0
	39	9.5	8.4	11.3	9.2	13.1	10.0	14.1	10.2	14.3	10.0	14.7	9.6	15.1	8.8

Notes:
TC: Total Capacity(kW)
SHC: Sensible Heat Capacity(kW)

6.2 Heating Capacity

Heating capacity

Capacity Index	Outdoor air temp.		Indoor air temp. (DB, °C)					
			16	18	20	21	22	24
	DB(°C)	WB(°C)	TC	TC	TC	TC	TC	TC
			kW	kW	kW	kW	kW	kW
2.8	-19.8	-20.0	2.1	2.1	2.1	2.1	2.1	2.1
	-18.8	-19.0	2.2	2.2	2.2	2.2	2.2	2.2
	-16.7	-17.0	2.3	2.3	2.3	2.3	2.3	2.3
	-14.7	-15.0	2.5	2.4	2.2	2.4	2.4	2.4
	-12.6	-13.0	2.6	2.6	2.3	2.6	2.6	2.6
	-10.5	-11.0	2.7	2.7	2.4	2.7	2.7	2.7
	-9.5	-10.0	2.8	2.8	2.5	2.8	2.8	2.7
	-8.5	-9.1	2.8	2.8	2.5	2.8	2.8	2.7
	-7.0	-7.6	2.9	2.9	2.6	2.8	2.8	2.8
	-5.0	-5.6	3.0	3.0	2.7	3.0	3.0	2.8
	-3.0	-3.7	3.2	3.2	2.8	3.1	3.0	2.8
	0.0	-0.7	3.4	3.4	3.0	3.1	3.0	2.8
	3.0	2.2	3.6	3.4	3.1	3.1	3.0	2.8
	5.0	4.1	3.6	3.4	3.2	3.1	3.0	2.8
	7.0	6.0	3.7	3.4	3.2	3.1	3.0	2.8
	9.0	7.9	3.7	3.4	3.2	3.1	3.0	2.8
	11.0	9.8	3.7	3.4	3.2	3.1	3.0	2.8
	13.0	11.8	3.7	3.4	3.2	3.1	3.0	2.8
	15.0	13.7	3.7	3.4	3.2	3.1	3.0	2.8
3.6	-19.8	-20.0	2.7	2.7	2.7	2.6	2.6	2.6
	-18.8	-19.0	2.8	2.8	2.8	2.8	2.7	2.7
	-16.7	-17.0	2.9	2.9	2.9	2.9	2.9	2.9
	-14.7	-15.0	3.1	3.0	2.7	3.0	3.0	3.0
	-12.6	-13.0	3.2	3.2	2.9	3.2	3.2	3.2
	-10.5	-11.0	3.4	3.4	3.0	3.4	3.4	3.4
	-9.5	-10.0	3.4	3.4	3.1	3.4	3.4	3.4
	-8.5	-9.1	3.5	3.5	3.2	3.5	3.5	3.4
	-7.0	-7.6	3.6	3.6	3.3	3.6	3.6	3.5
	-5.0	-5.6	3.8	3.8	3.4	3.7	3.7	3.5
	-3.0	-3.7	4.0	4.0	3.5	3.9	3.8	3.5
	0.0	-0.7	4.2	4.2	3.7	3.9	3.8	3.5
	3.0	2.2	4.4	4.3	3.9	3.9	3.8	3.5
	5.0	4.1	4.5	4.3	4.0	3.9	3.8	3.5
	7.0	6.0	4.6	4.3	4.0	3.9	3.8	3.5
	9.0	7.9	4.6	4.3	4.0	3.9	3.8	3.5
	11.0	9.8	4.6	4.3	4.0	3.9	3.8	3.5
	13.0	11.8	4.6	4.3	4.0	3.9	3.8	3.5
	15.0	13.7	4.6	4.3	4.0	3.9	3.8	3.5
5.6	-19.8	-20.0	4.2	4.2	4.2	4.2	4.2	4.2
	-18.8	-19.0	4.3	4.3	4.3	4.3	4.3	4.3
	-16.7	-17.0	4.6	4.6	4.6	4.6	4.6	4.5
	-14.7	-15.0	4.9	4.8	4.3	4.8	4.8	4.8
	-12.6	-13.0	5.1	5.1	4.5	5.0	5.0	5.0
	-10.5	-11.0	5.4	5.4	4.8	5.4	5.3	5.3
	-9.5	-10.0	5.4	5.4	4.9	5.4	5.4	5.4
	-8.5	-9.1	5.5	5.5	5.0	5.5	5.5	5.4
	-7.0	-7.6	5.7	5.7	5.1	5.6	5.6	5.5
	-5.0	-5.6	6.0	6.0	5.4	5.8	5.8	5.5
	-3.0	-3.7	6.2	6.2	5.5	6.1	5.9	5.5
	0.0	-0.7	6.6	6.6	5.8	6.1	5.9	5.5
	3.0	2.2	7.0	6.7	6.2	6.1	5.9	5.5
	5.0	4.1	7.1	6.7	6.3	6.1	5.9	5.5
	7.0	6.0	7.2	6.7	6.3	6.1	5.9	5.5
	9.0	7.9	7.2	6.7	6.3	6.1	5.9	5.5
	11.0	9.8	7.2	6.7	6.3	6.1	5.9	5.5
	13.0	11.8	7.2	6.7	6.3	6.1	5.9	5.5
	15.0	13.7	7.2	6.7	6.3	6.1	5.9	5.5

Notes:
TC: Total Capacity(kW)

6. Capacity Tables

Heating capacity

Capacity Index	Outdoor air temp.		Indoor air temp. (DB, °C)					
			16	18	20	21	22	24
	DB(°C)	WB(°C)	TC	TC	TC	TC	TC	TC
			kW	kW	kW	kW	kW	kW
7.1	-19.8	-20.0	5.4	5.4	5.4	5.3	5.3	5.3
	-18.8	-19.0	5.5	5.5	5.5	5.5	5.4	5.4
	-16.7	-17.0	5.8	5.8	5.8	5.8	5.8	5.8
	-14.7	-15.0	6.2	6.1	5.5	6.1	6.1	6.1
	-12.6	-13.0	6.5	6.5	5.8	6.4	6.4	6.4
	-10.5	-11.0	6.8	6.8	6.0	6.8	6.7	6.7
	-9.5	-10.0	6.9	6.9	6.2	6.9	6.9	6.8
	-8.5	-9.1	7.0	7.0	6.3	7.0	7.0	6.8
	-7.0	-7.6	7.3	7.3	6.5	7.1	7.1	7.0
	-5.0	-5.6	7.6	7.6	6.8	7.4	7.4	7.0
	-3.0	-3.7	7.9	7.9	7.0	7.7	7.5	7.0
	0.0	-0.7	8.4	8.4	7.4	7.8	7.5	7.0
	3.0	2.2	8.9	8.6	7.8	7.8	7.5	7.0
	5.0	4.1	9.0	8.6	8.0	7.8	7.5	7.0
	7.0	6.0	9.2	8.6	8.0	7.8	7.5	7.0
	9.0	7.9	9.2	8.6	8.0	7.8	7.5	7.0
	11.0	9.8	9.2	8.6	8.0	7.8	7.5	7.0
	13.0	11.8	9.2	8.6	8.0	7.8	7.5	7.0
	15.0	13.7	9.2	8.6	8.0	7.8	7.5	7.0
14.1	-19.8	-20	10.7	10.7	10.7	10.5	10.5	10.5
	-18.8	-19	10.9	10.9	10.9	10.9	10.7	10.7
	-16.7	-17	11.5	11.5	11.5	11.5	11.5	11.5
	-14.7	-15	12.3	12.1	10.9	12.1	12.1	12.1
	-12.6	-13	12.9	12.9	11.5	12.7	12.7	12.7
	-10.5	-11	13.5	13.5	11.9	13.5	13.3	13.3
	-9.5	-10	13.7	13.7	12.3	13.7	13.7	13.5
	-8.5	-9.1	13.9	13.9	12.5	13.9	13.9	13.5
	-7	-7.6	14.5	14.5	12.9	14.1	14.1	13.9
	-5	-5.6	15.1	15.1	13.5	14.7	14.7	13.9
	-3	-3.7	15.7	15.7	13.9	15.3	14.9	13.9
	0	-0.7	16.7	16.7	14.7	15.5	14.9	13.9
	3	2.2	17.7	17.1	15.5	15.5	14.9	13.9
	5	4.1	17.9	17.1	15.9	15.5	14.9	13.9
	7	6	18.3	17.1	15.9	15.5	14.9	13.9
	9	7.9	18.3	17.1	15.9	15.5	14.9	13.9
	11	9.8	18.3	17.1	15.9	15.5	14.9	13.9
	13	11.8	18.3	17.1	15.9	15.5	14.9	13.9
	15	13.7	18.3	17.1	15.9	15.5	14.9	13.9

Notes:
TC: Total Capacity(kW)

7. Air Velocity and Temperature Distribution

ARNU09GVEA2

▪ Ceiling

Cooling

Discharge angle:50°

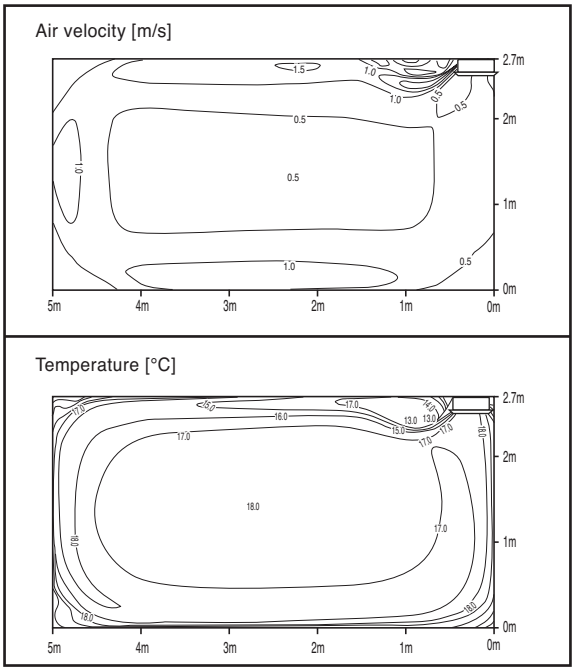

Heating

Discharge angle:60°

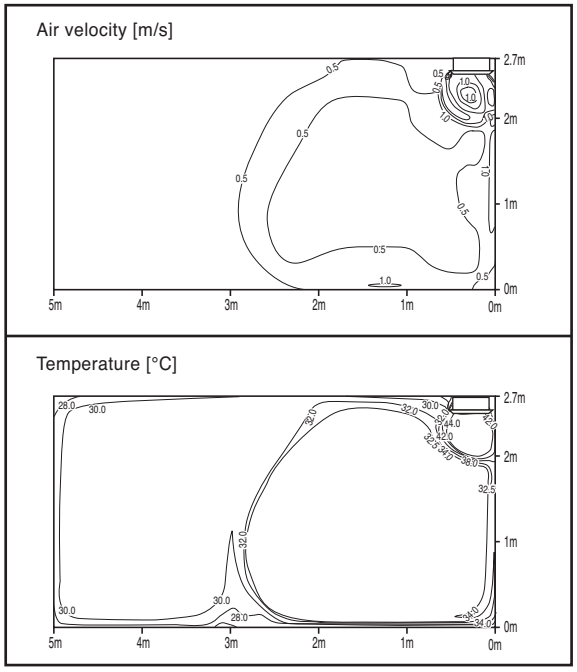

ARNU09GVEA2

▪ Floor

Cooling

Discharge angle:45°

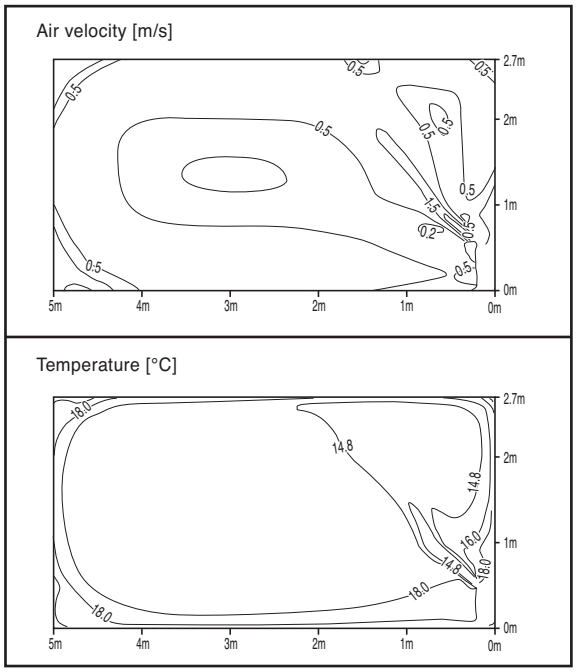

Heating

Discharge angle:50°

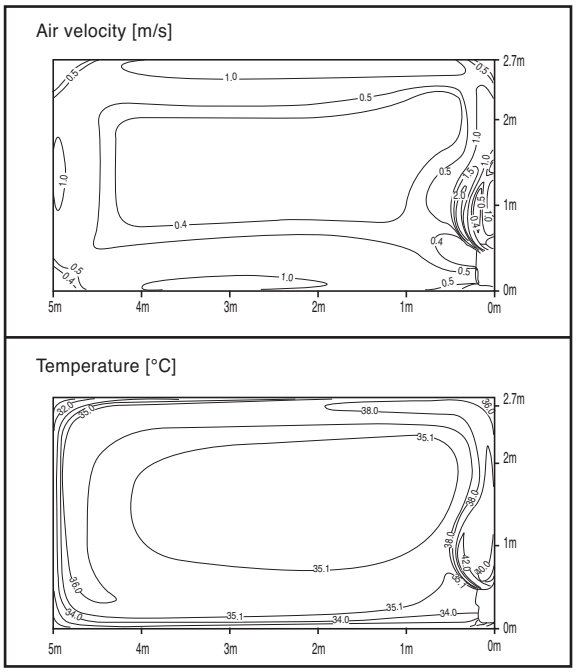

7. Air Velocity and Temperature Distribution

ARNU12GVEA2

▪ Ceiling

Cooling

Discharge angle:50°

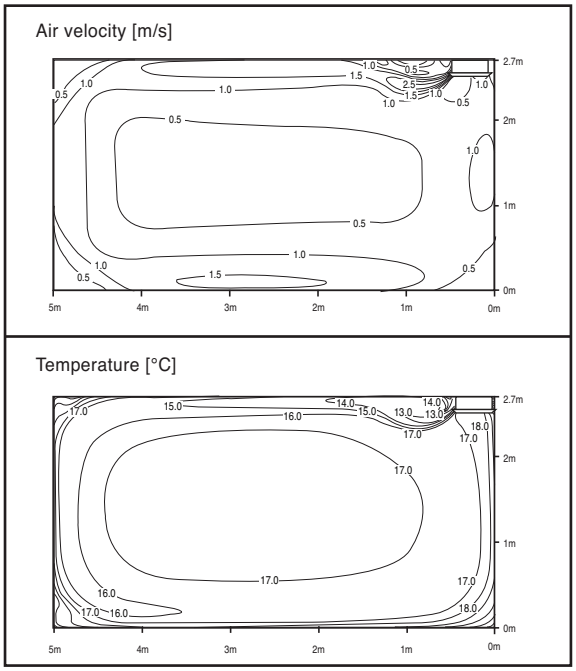

Heating

Discharge angle:60°

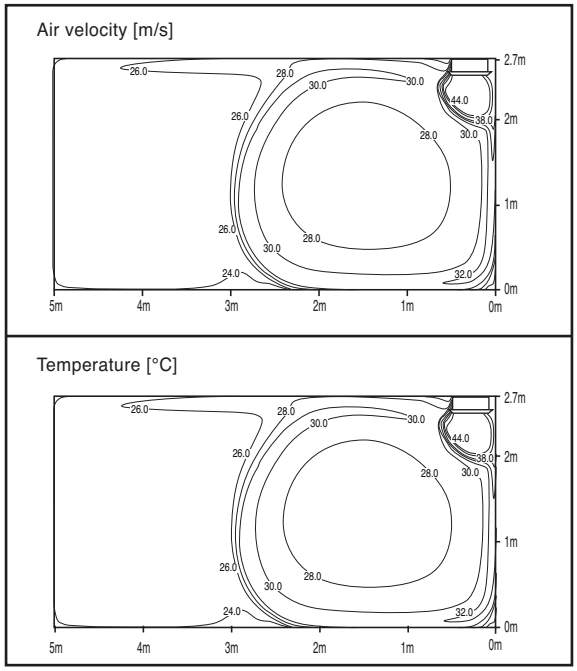

ARNU12GVEA2

▪ Floor

Cooling

Discharge angle:50°

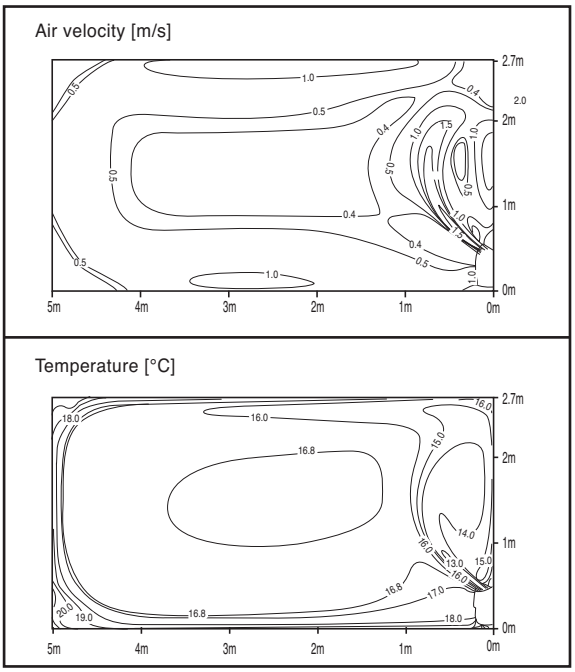

Heating

Discharge angle:60°

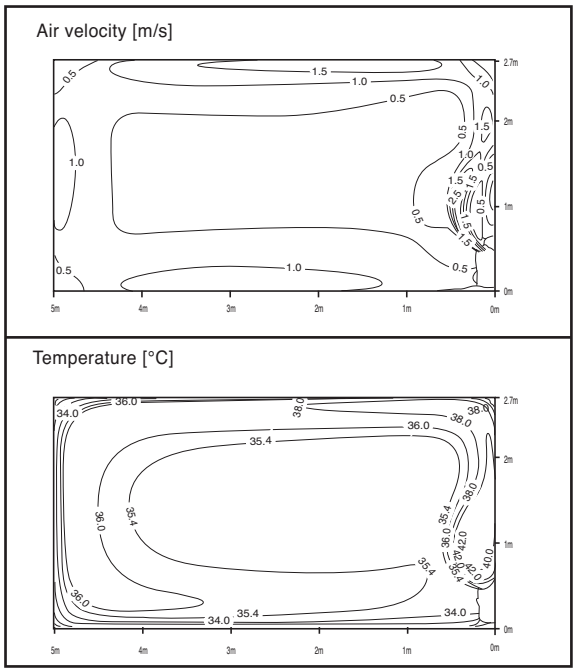

7. Air Velocity and Temperature Distribution

URNU18GVJA2

▪ Ceiling

Cooling

Discharge angle:50°

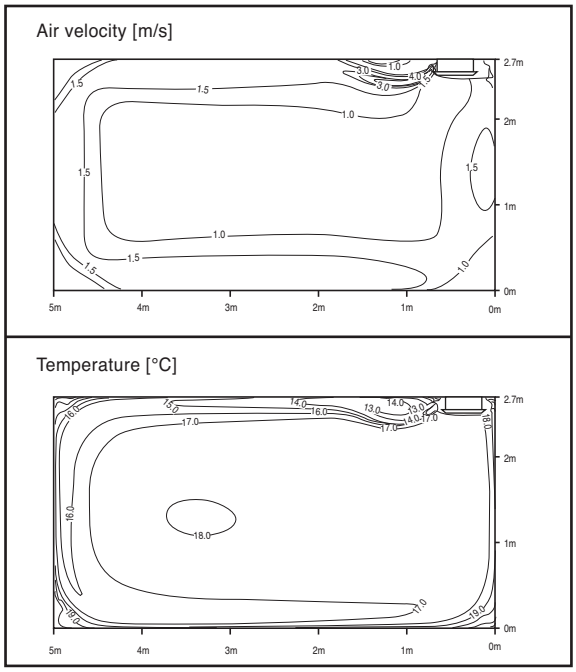

Heating

Discharge angle:60°

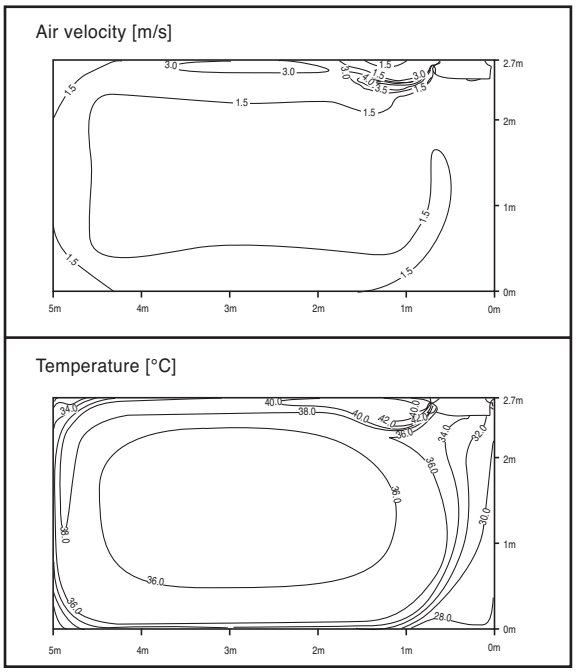

URNU24GVJA2

▪ Ceiling

Cooling

Discharge angle:50°

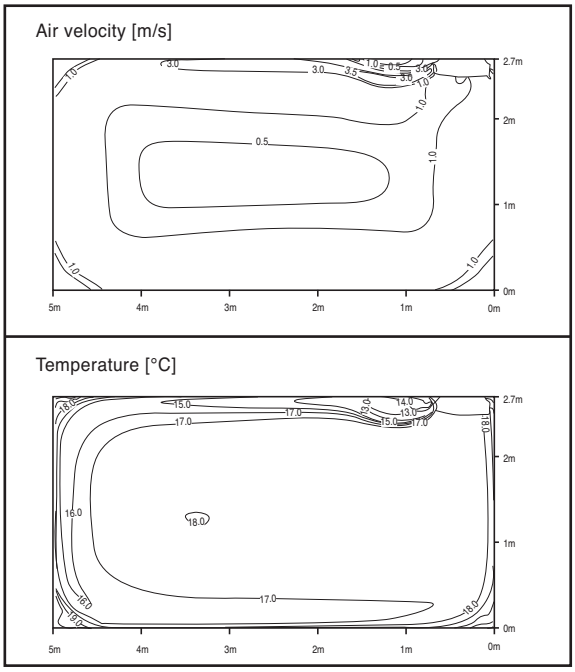

Heating

Discharge angle:60°

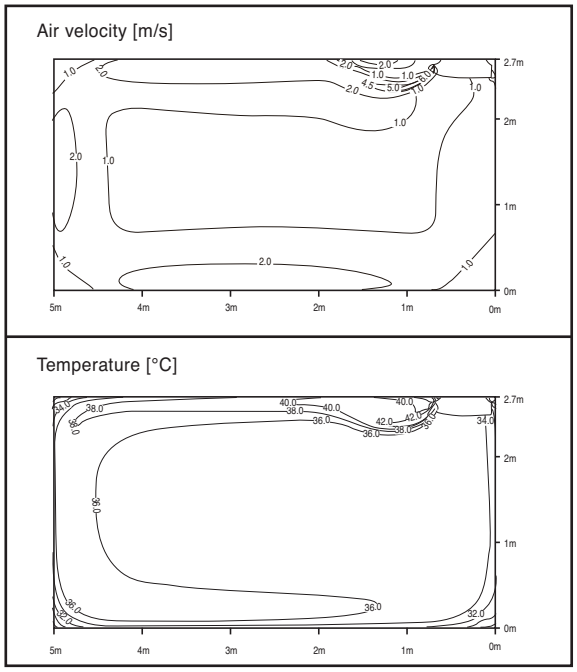

7. Air Velocity and Temperature Distribution

URNU48GVLA2

■ Ceiling

Cooling

Discharge angle:10°

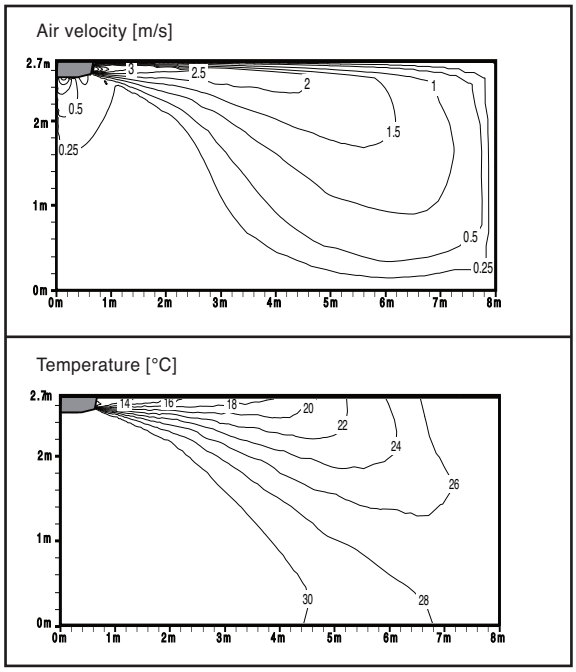

Heating

Discharge angle:45°

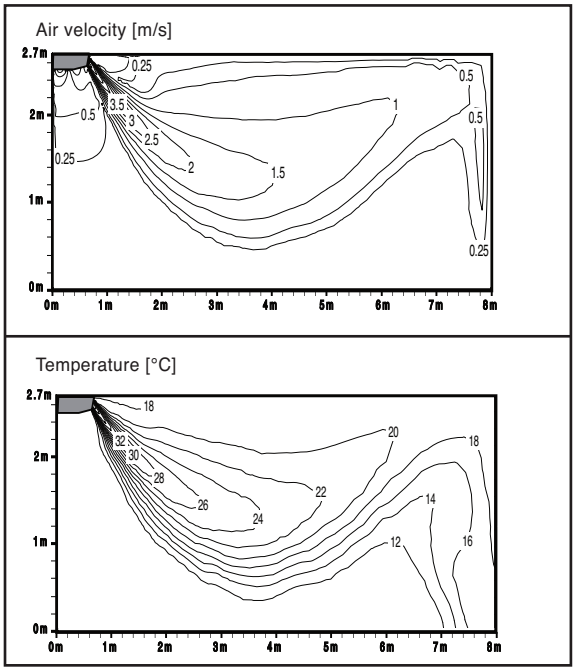

8. Electric Characteristics

Units					Power Supply		IFM		Input(W)	
Model	Type	Hz	Volts	Voltage Range	MCA	MFA	kW	FLA	Cooling	Heating
ARNU09GVEA2	VE	50	220 - 240	Max:264 Min:198	0.22	15	0.027	0.17	30	30
ARNU12GVEA2	VE				0.22	15	0.027	0.17	30	30
URNU18GVJA2	VJ				0.43	15	0.060	0.35	63	63
URNU24GVJA2	VJ				0.43	15	0.060	0.35	63	63
URNU48GVLA2	VL				1.10	15	0.162	0.88	190	190
ARNU09GVEA2	VE	60	220	Max:242 Min:198	0.22	15	0.027	0.17	30	30
ARNU12GVEA2	VE				0.22	15	0.027	0.17	30	30
URNU18GVJA2	VJ				0.43	15	0.060	0.35	63	63
URNU24GVJA2	VJ				0.43	15	0.060	0.35	63	63
URNU48GVLA2	VL				1.10	15	0.162	0.88	190	190

Symbols:

MCA: Minimum Circuit Amperes (A)
MFA : Maximum Fuse Amperes(see note 5)
kW : Fan Motor Rated Output(kW)
FLA : Full Load Amperes(A)
IFM : Indoor Fan Motor

Note :

1. Voltage Range
   Units are suitable for use on electrical system where voltage supplied to unit terminals is not below or above the listed range limits.
2. Maximum allowable voltage unbalance between phase is 2%.
3. MCA/MFA
   MCA = 1.25 x FLA
   MFA ≤ 4 x FLA
   (Next lower standard fuse rating. Minimum 15A)
4. Select wire size based on the MCA.
5. Instead of fuse, use Circuit Breaker.

9. Sound Levels

Overall

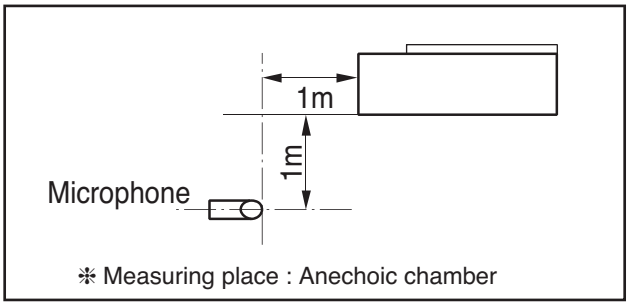

Notes:
1. Sound measured at each 1m away from the front and bottom of the unit
2. Operating condition
   - Power source : 220-240V 50Hz / 220V 60Hz
   - Cooling : Indoor temperature (27°C DB, 19°C WB), Outdoor temperature (35°C DB, 24°C WB)
   - Heating : Indoor temperature (20°C DB, 15°C WB), Outdoor temperature (7°C DB, 6°C WB)
3. Reference accoustic pressure 0dB = 20μPa
4. Sound level will vary depending on a range of factors such as the construction(acoustic absorption coefficient) of particular room in which the equipment in installed.

Model	Sound Levels dB(A)		
	H	M	L
ARNU09GVEA2	36	32	28
ARNU12GVEA2	38	36	30

Model	Sound Levels dB(A)		
	H	M	L
URNU18GVJA2	42	40	37
URNU24GVJA2	43	41	39
URNU48GVLA2	49	48	47

Sound Pressure Level

ARNU09GVEA2

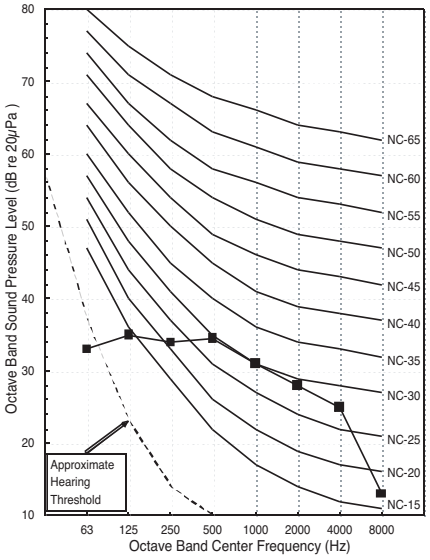

ARNU12GVEA2

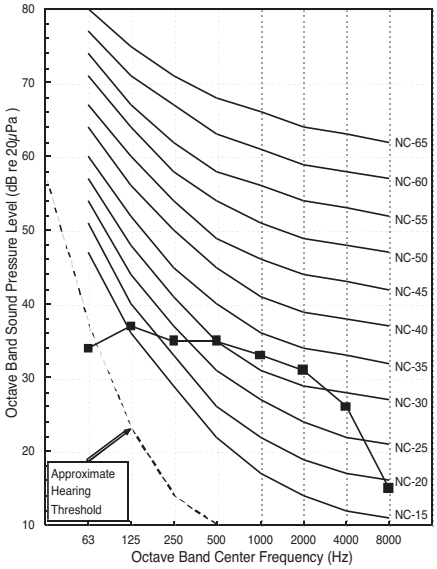

URNU18GVJA2

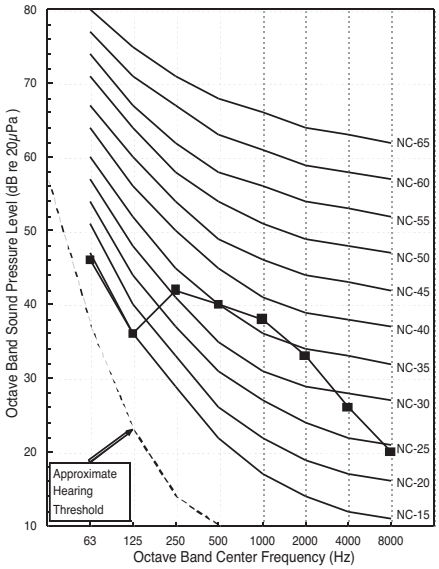

URNU24GVJA2

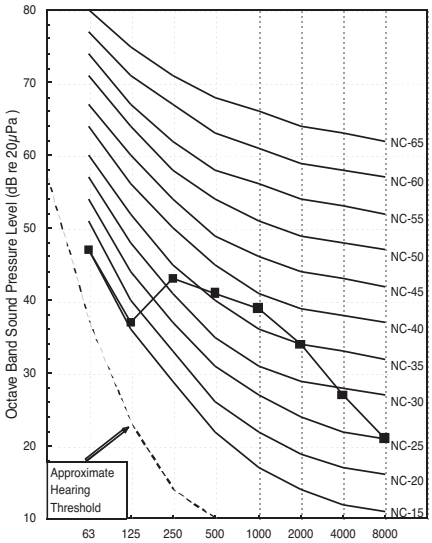

URNU48GVLA2

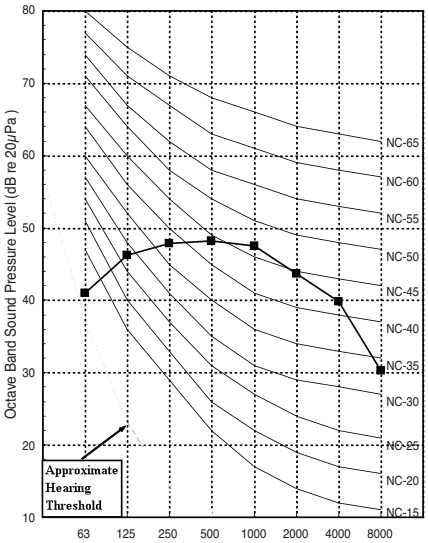

10. Installation

- Please read this instruction sheet completely before installing the product.
- When the power cord is damaged, replacement work shall be performed by authorized personnel only.
- Installation work must be performed in accordance with the national wiring standards by authorized personnel only.

10.1 Features

10.1.1 VE Chassis

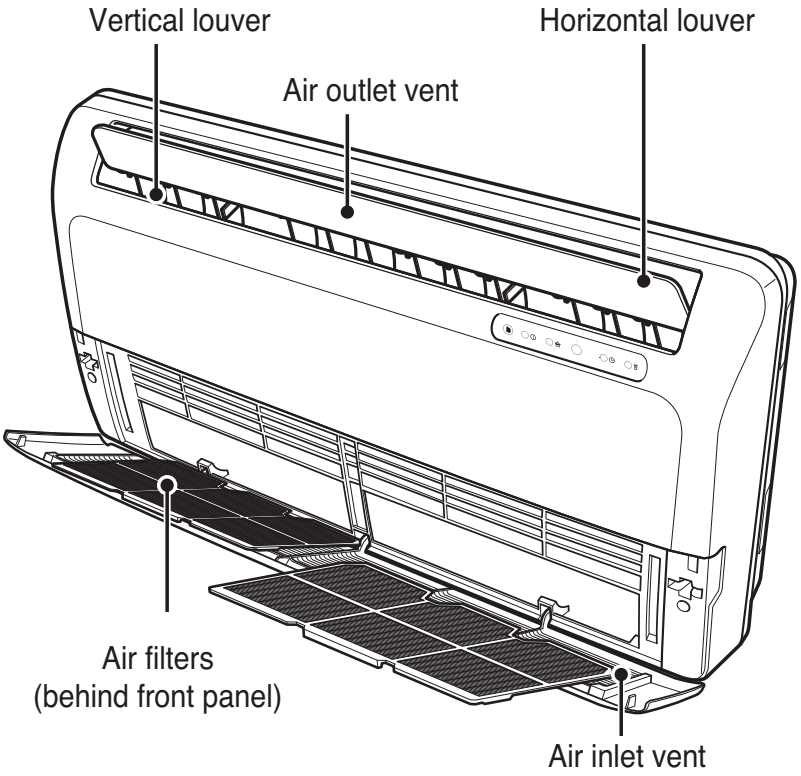

10.1.2 VJ Chassis

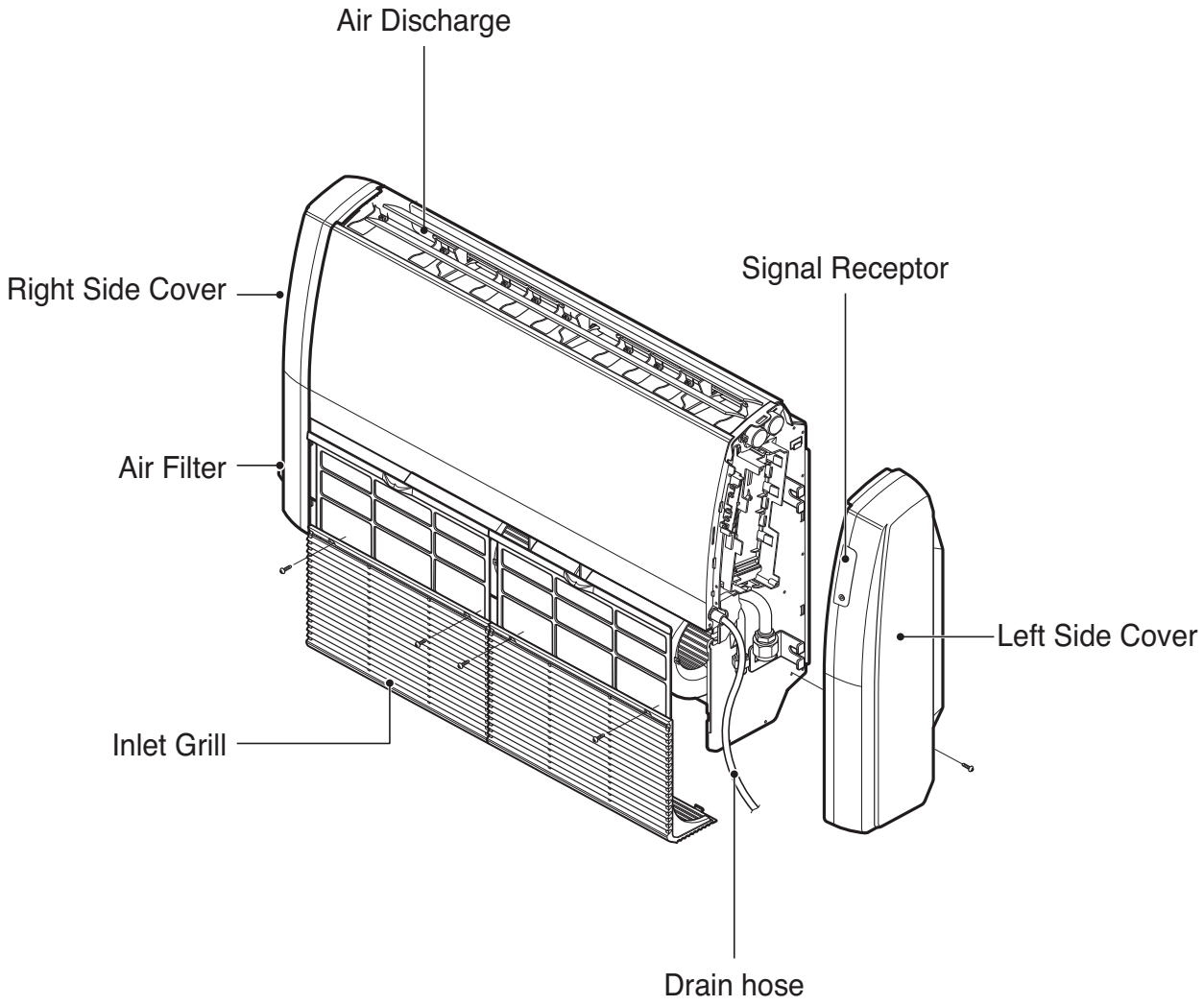

10.1.3 VL Chassis

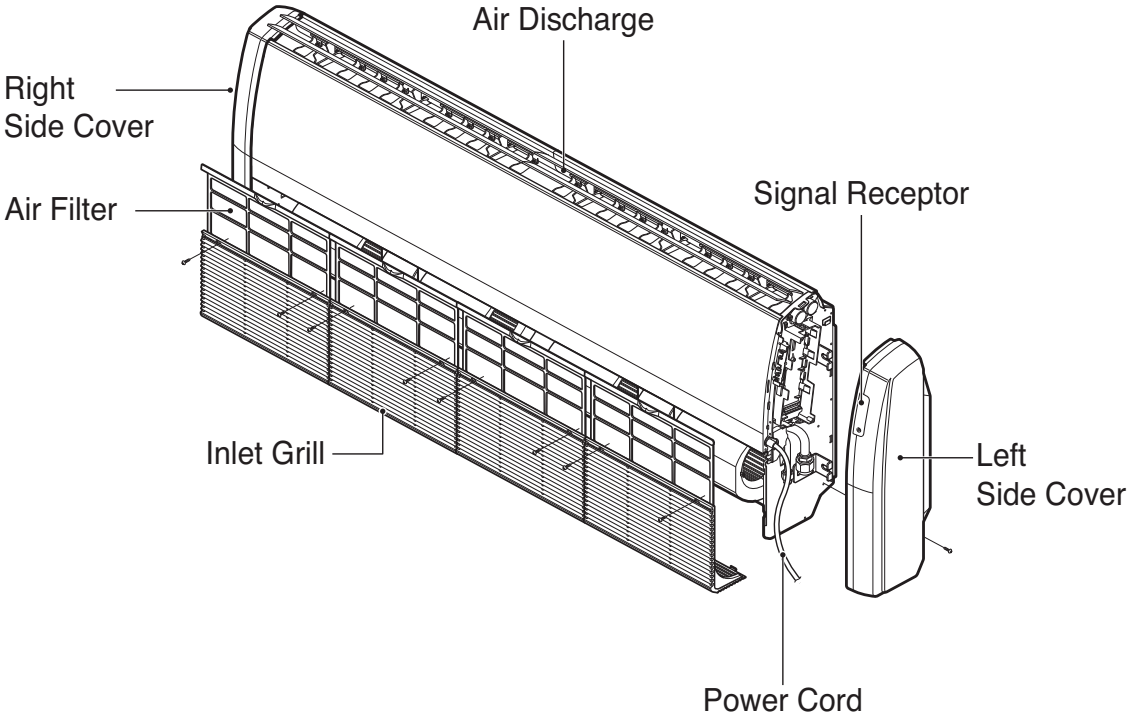

VE Chassis

10.2 Installation Map

NOTICE Installation parts you should purchase. (※)

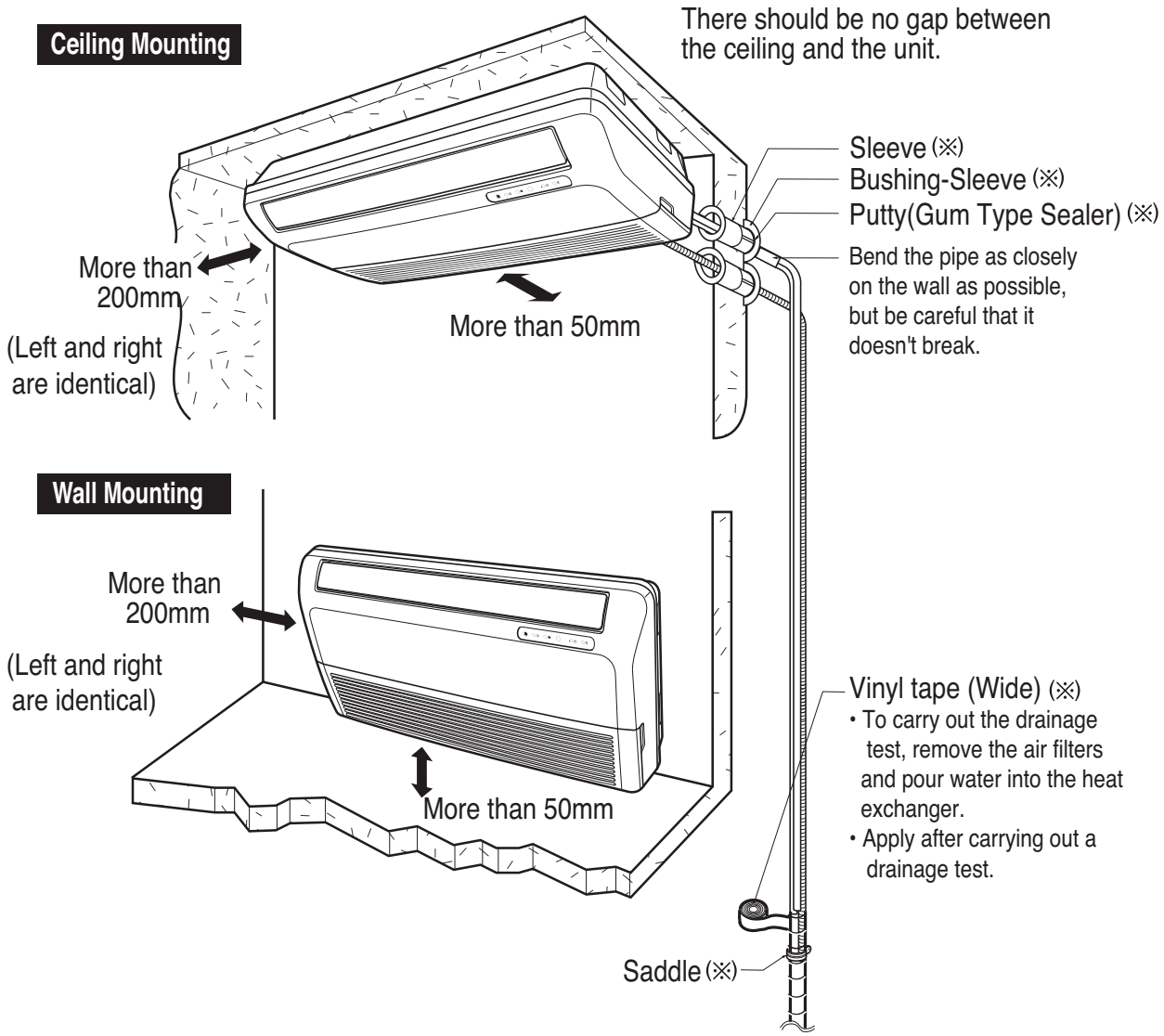

10.3 Select the best Location

Indoor unit

1. Do not have any heat or steam near the unit.
2. Select a place where there are no obstacles in front of the unit.
3. Make sure that condensation drainage can be conveniently routed away.
4. Do not install near a doorway.
5. Ensure that the interval between a wall and the left (or right) of the unit is more than 200mm. The unit should be installed as low as possible on the wall, allowing a minimum of 500mm from floor.
6. Use a stud finder to locate studs to prevent unnecessary damage to the wall.

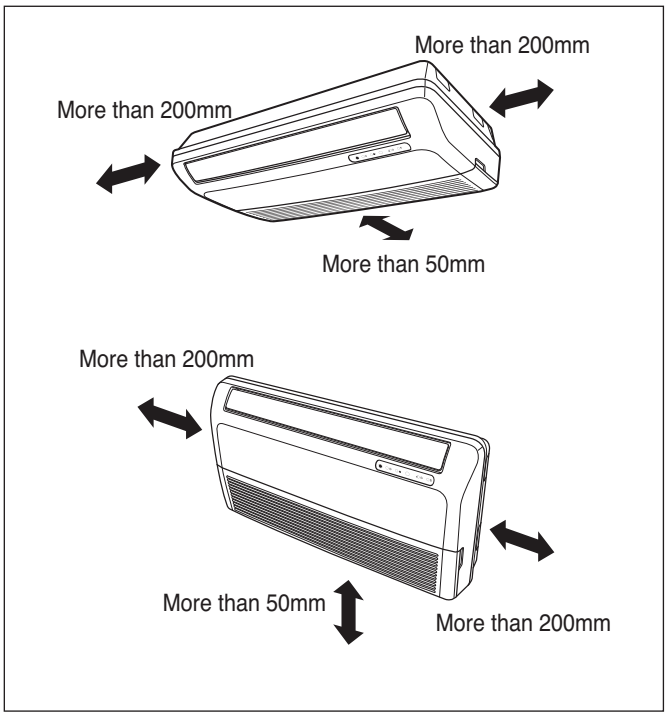

9.4 Preparing Work for Installation

Open panel front

1. Remove the five screws.
2. Release the claws in the 3 places indicated.
3. Pull up the Front Panel.

Cover pipe and cover side remove

1. Pull up the side cover of desired connecting direction, then cover side is separated.
2. Pick the pipe hole of the side cover.

CAUTION: After removing the pipe hole, cut the burr for safety.

NOTICE When making pipe path through rear wall, you don't need to pick the pipe hole.

Drain hose junction

1. Remove the rubber stopple in the desired drain direction.
2. Insert drain hose into the handle of drain pan, and join drain hose and connecting hose according to the figure as shown on the right.

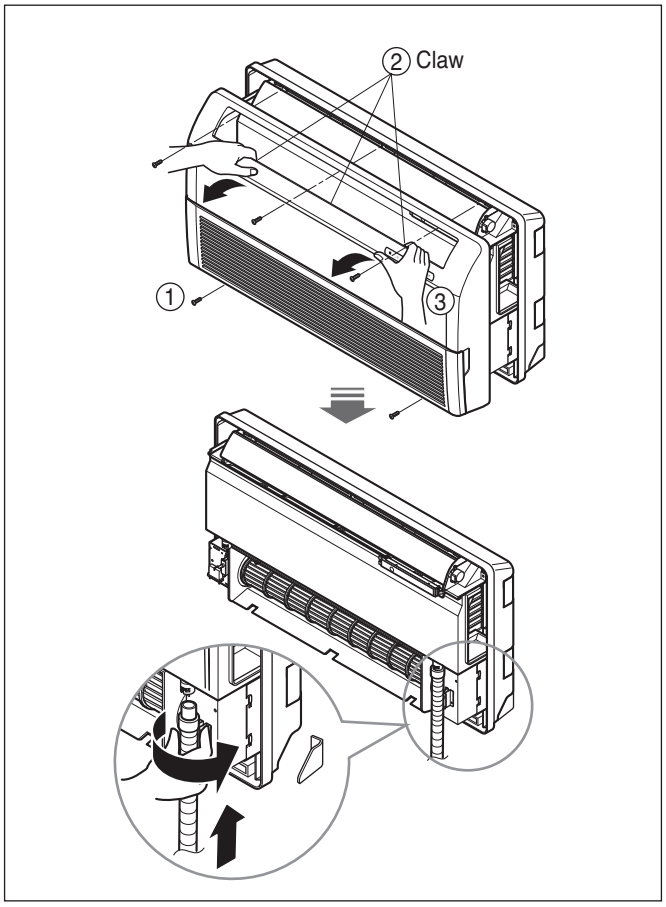

10.5 Mounting the installation plate(Wall Mounting)

The wall you select should be strong and solid enough to prevent vibration

1. Mount the installation plate on the wall with type "A" screws. While mounting the unit on a concrete wall, use anchor bolts.

• Mount the installation plate horizontally by aligning the centerline using a level.

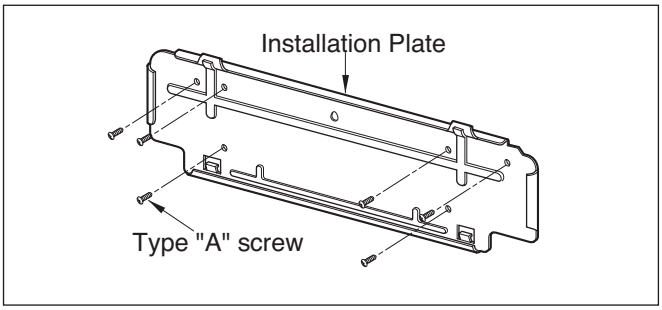

2. Measure the wall and mark the centerline. It is also important to use caution concerning the location of the installation plate-routing of the wiring to power outlets is through the walls typically. Drilling the hole through the wall for piping connections must be done safely.

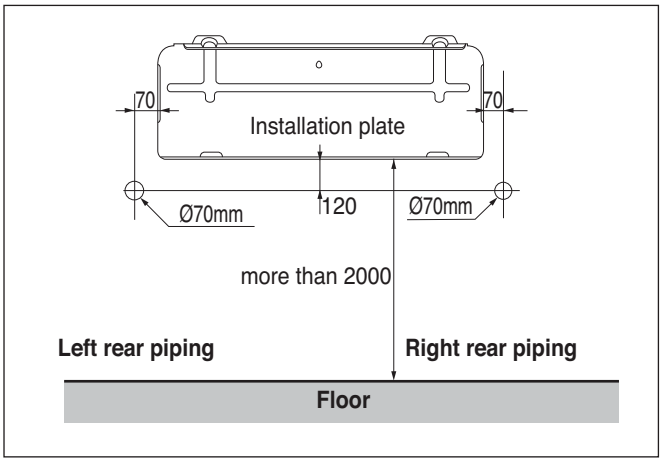

10.6 Mounting the anchor Nut & Bolt(Ceiling Mounting)

- Prepare 4 suspension bolts. (Each bolts length should be same.)
- Measure and mark the position for the Suspension bolts and the piping hole.
- Drill the hole for anchor nut on the ceiling.
- Insert the nuts and washer onto the suspension bolts for locking the suspension bolts on the ceiling.
- Mount the suspension bolts to the anchor-nuts firmly.
- Secure the hangers onto the Suspension bolts (adjust level roughly.) using nuts, washers and spring washers.
- Adjust a level with a level gauge on the direction of left-right, back-forth by adjusting suspension bolts.
- Adjust a level on the direction of top-bottom by adjusting supension bolts. Then the unit will be inclined to the bottomside so as to drain well.

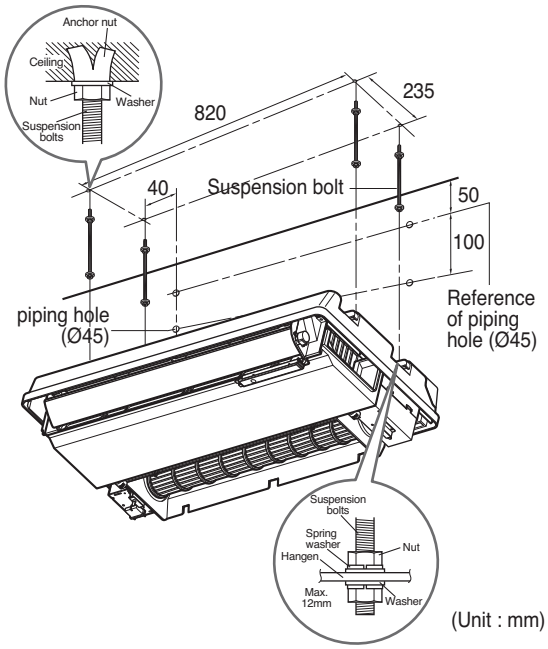

⚠ CAUTION

: Tighten the nut and bolt to prevent unit falling.

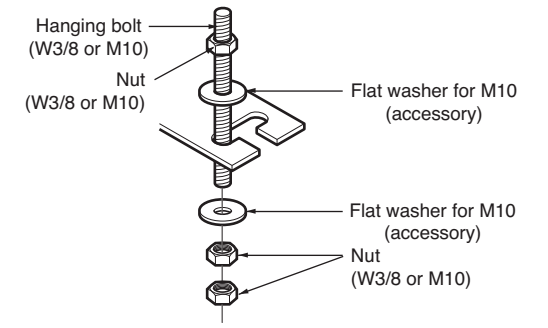

10. Installation

⚠CAUTION

: Installation Information For right piping. Follow the instruction below.

Good case

For left piping. Follow the instruction below.

1. Press on the upper side of clamp. (Ⓐ)
2. Unfold the tubing downward slowly. (Ⓑ)
3. Bend the tubing to the left side of chassis.

Bad case

1. Following bending type from right to left could cause problem of pipe damage.

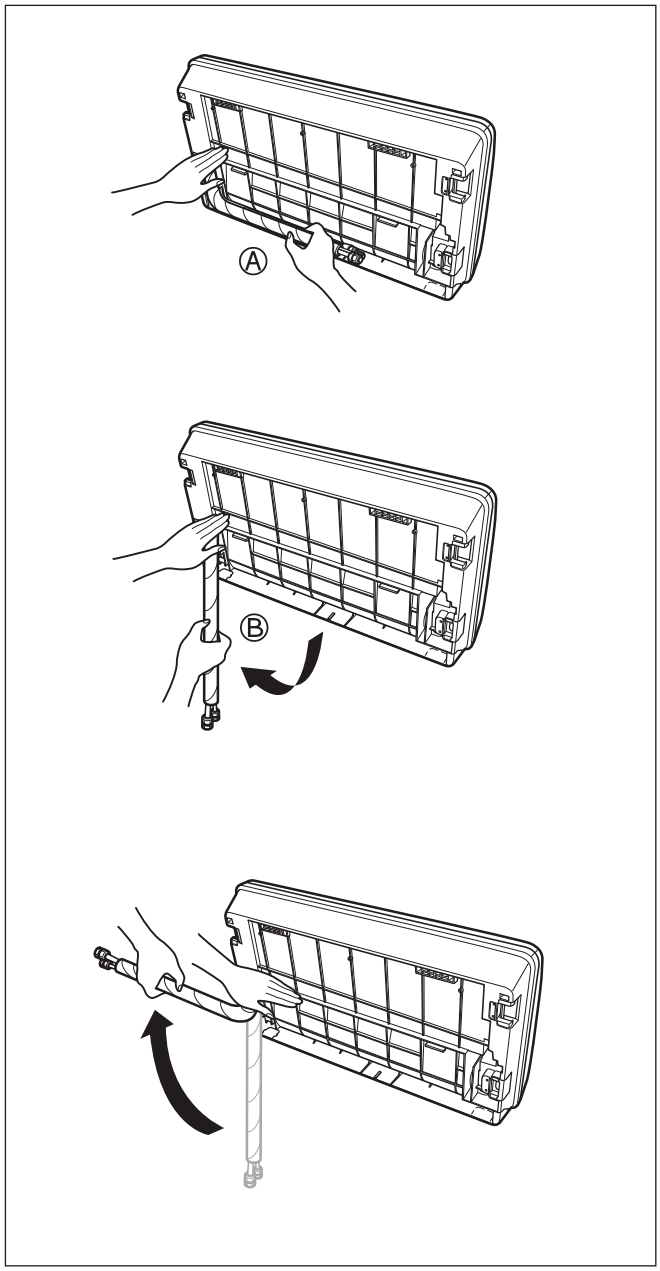

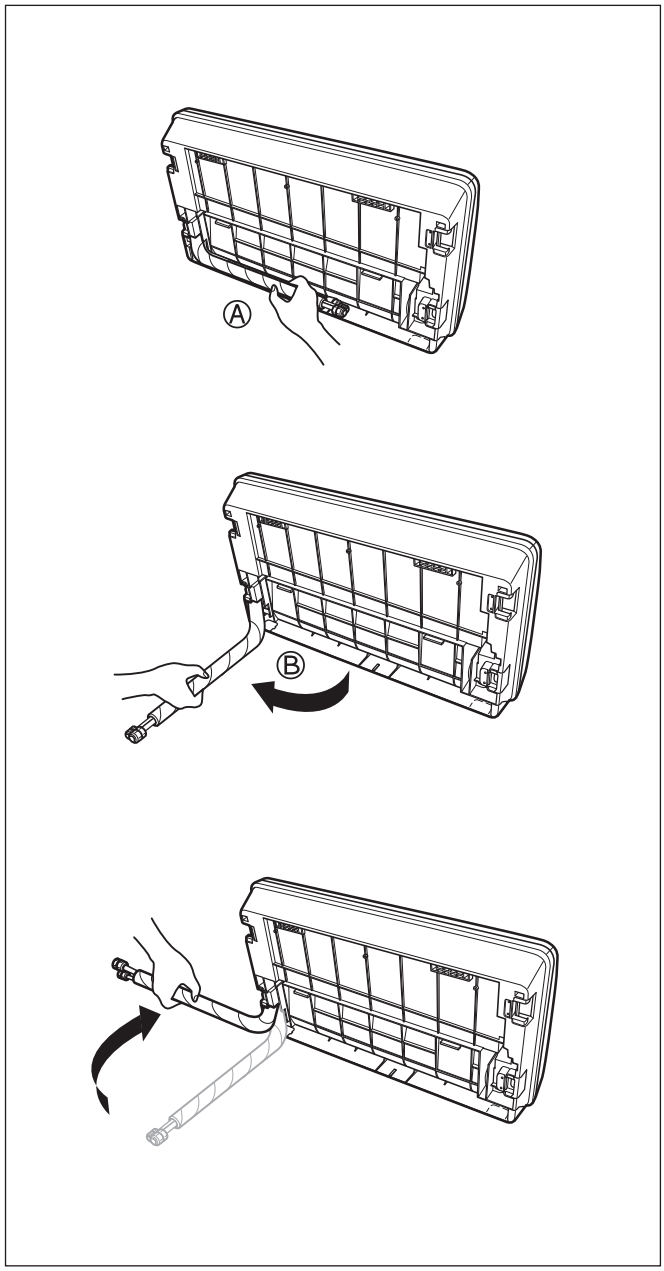

10.7 Checking the Drainage

1. Set the air direction louvers up-and-down to the position(horizontally) by hand.

To check the drainage.

1. Pour a glass of water on the evaporator using a kettle.
2. Ensure the water flows through the drain hose of the indoor unit without any leakage and goes out the drain exit.

■ **Checking the Drainage**

1. Remove the Air Filter.

- To remove air filter, take hold of tab and pull slightly upwards.

2. Check the drainage.

- Spray one or two glasses of water upon the evaporator.
- Ensure that water flows drain hose of indoor unit without any leakage.

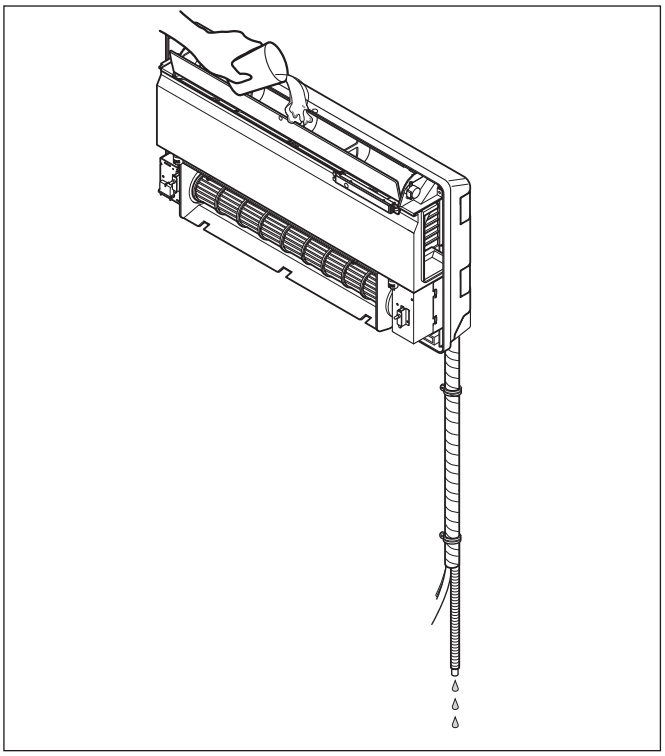

Drain piping

1. The drain hose should point downward for easy drain flow.
2. Do not make drain piping like the following.

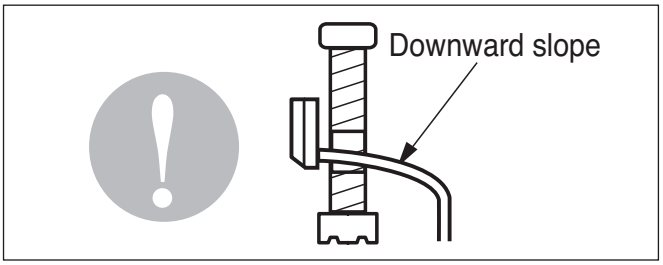

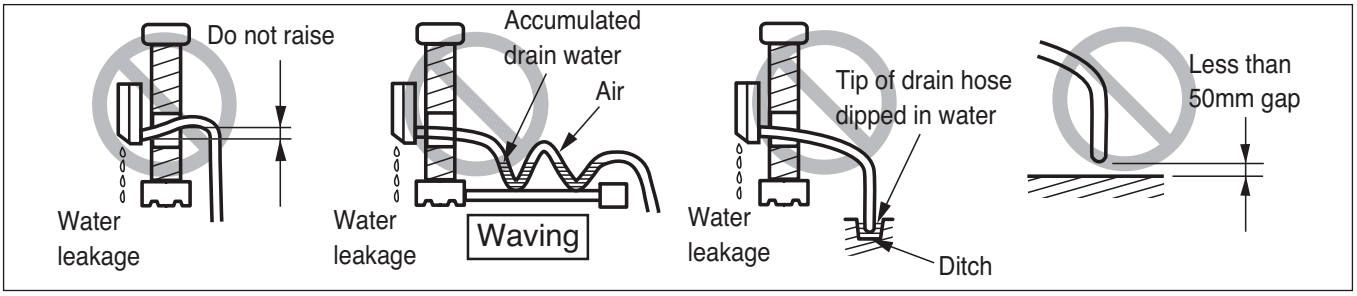

10.8 Panel Front Assembly

1. Suspend the hook of panel front in the groove.
2. Press the panel front.
3. Screw up panel front.

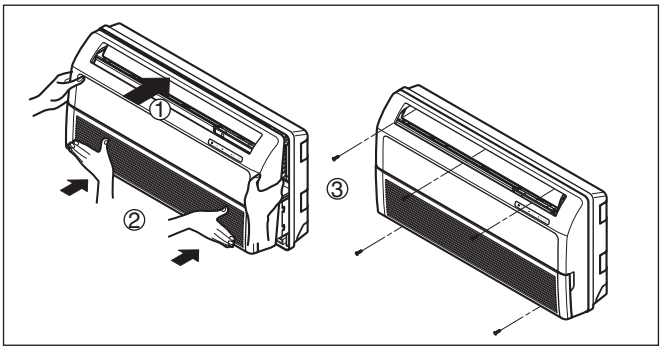

VJ/VL Chassis

10.9 Select the best Location

Indoor unit

1. Do not have any heat or steam near the unit.
2. Select a place where there are no obstacles in front of the unit.
3. Make sure that condensation drainage can be conveniently routed away.
4. Do not install near a doorway.
5. Ensure that the interval between a wall and the left (or right) of the unit is more than 700mm.
6. Use a stud finder to locate studs to prevent unnecessary damage to the wall.

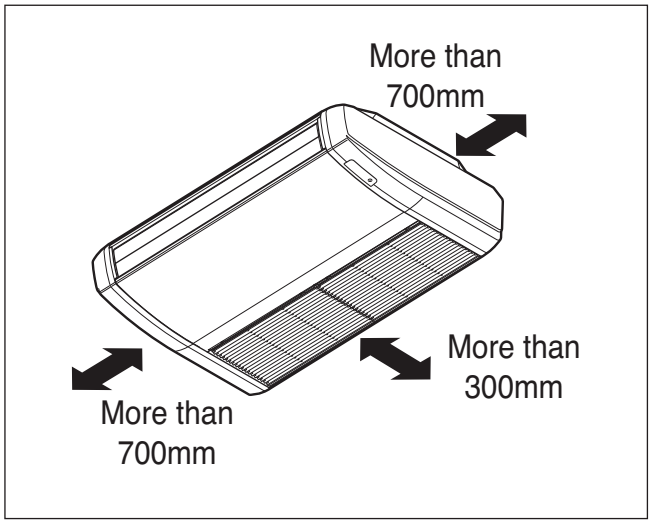

⚠CAUTION : In case that the unit is installed near the sea, the installation parts may be corroded by salt. The installation parts (and the unit) should be treated with appropriate anti-corrosion measures.

10.10 Preparing Work for Installation

Open side cover

1. Remove two screws from side-cover as shown in fig.
2. Unlock side-cover from side panel by slightly pulling the edge of side cover.
3. Tap the side-cover with your palm on the back-side.(Inlet grill side.)
4. Hold the side-cover with other hand while tapping to prevent it to fall down.
5. Remove the rubber stopple in the desired drain direction.
6. Knock out the pipe hole from the left side-cover with the help or nipper/plier.
7. Knock hole on right side-cover only if right side is selected for water drain.

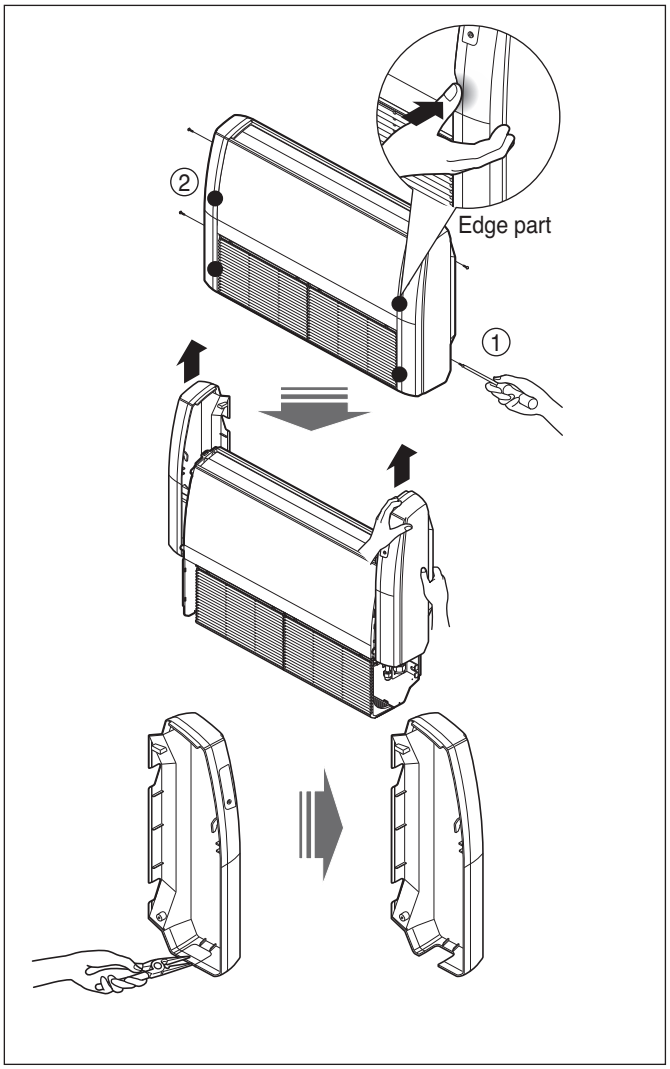

10. Installation

MOUNTING THE ANCHOR NUT AND BOLT

- Prepare 4 suspension bolts. (Each bolts length should be same.)
- Measure and mark the position for the Suspension bolts and the piping hole.
- Drill the hole for anchor nut on the ceiling.
- Insert the nuts and washer onto the suspension bolts for locking the suspension bolts on the ceiling.
- Mount the suspension bolts to the anchor-nuts firmly.
- Secure the hangers onto the Suspension bolts (adjust level roughly.) using nuts, washers and spring washers.
- Adjust a level with a level gauge on the direction of left-right, back-forth by adjusting suspension bolts.
- Adjust a level on the direction of top-bottom by adjusting supension bolts. Then the unit will be inclined to the bottomside so as to drain well.

(Unit: mm)

MODEL \ DIM.	A	B
VJ	855	320
VL	1655	320

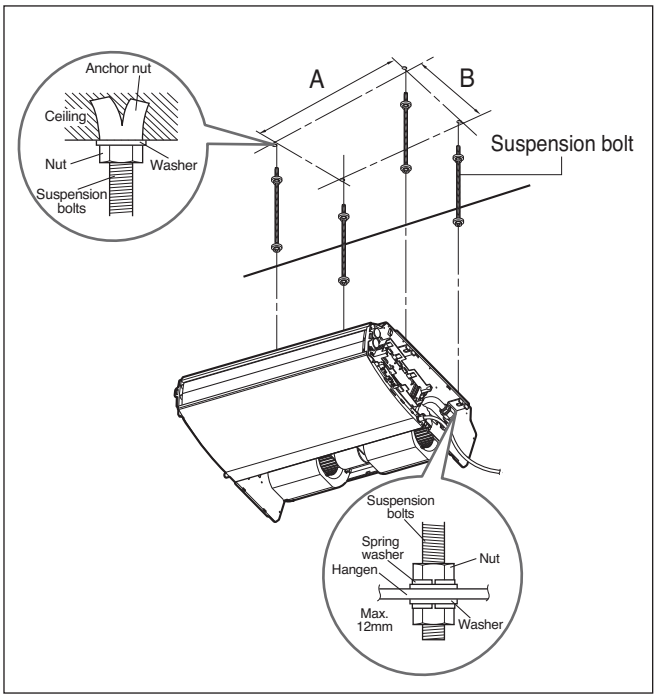

⚠ CAUTION

: Tighten the nut and bolt to prevent unit falling.

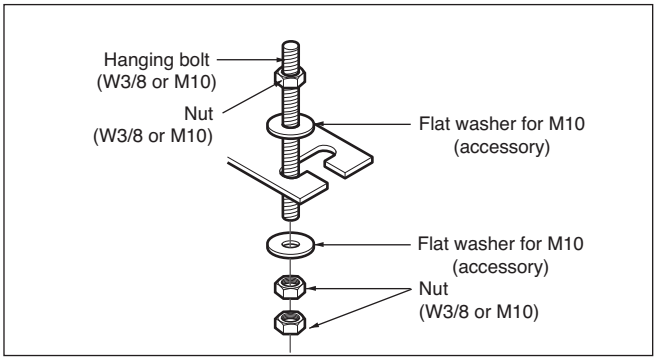

DRILL A HOLE IN THE WALL.

- Drill the piping hole with a ø70mm hole core drill. Drill the piping hole at either the right or the left with the hole slightly slanted to the outdoor side.

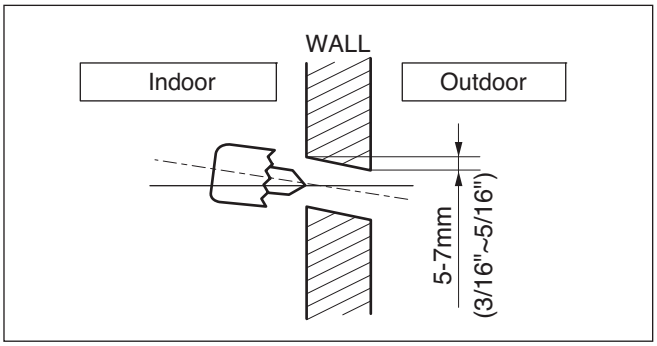

10.11 Indoor unit installation

Hang the Indoor unit on suspension bolt as per following guidelines:

1. Lift the indoor unit to sufficient height.
2. Insert the suspended part of four suspension bolt in the four hangers provided on the side of main body one by one.
3. Lower the indoor unit till the hangers rest on their respective flat washer.
4. Adjust the level in the top down direction by adjusting the suspension bolts.
   Inclined the indoor unit as per direction provided in the fig

⚠ CAUTION

: Installation Information For Declination

1. **Inclination** of the indoor unit is very **important for drain** purposes in the convertible type air conditioner.
2. Minimum thickness of the insulation for the connecting pipe shall be 10mm.
3. If the Installation Plates are fixed to horizontal line, the indoor unit after installing will be declined to the bottomside.

Front of view

- The unit must be horizontal or inclined at angle.
- The inclination should be less than or equal to 1° or in between 10 to 20mm inclined in drain direction as shown in fig.

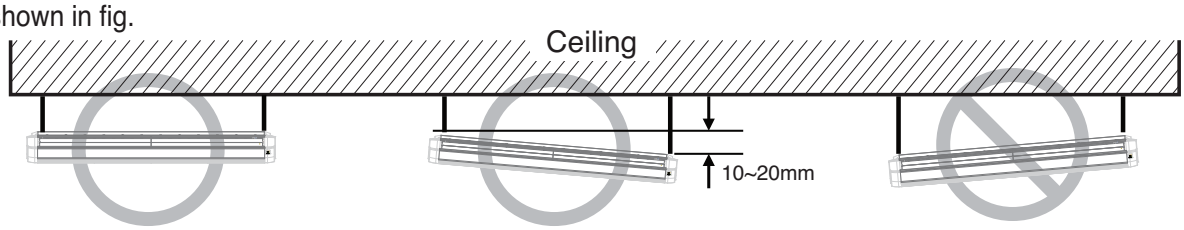

Side of view

- The unit must be inclined to the bottomside of the unit when finished installation.

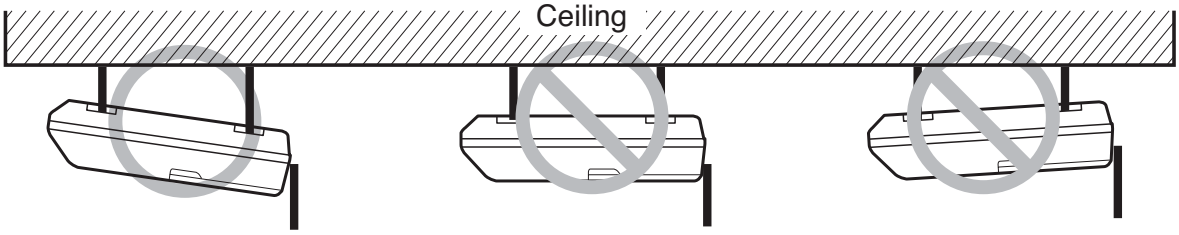

10.12 Checking the Drainage

1. Set the air direction louvers up-and-down to the position(horizontally) by hand.

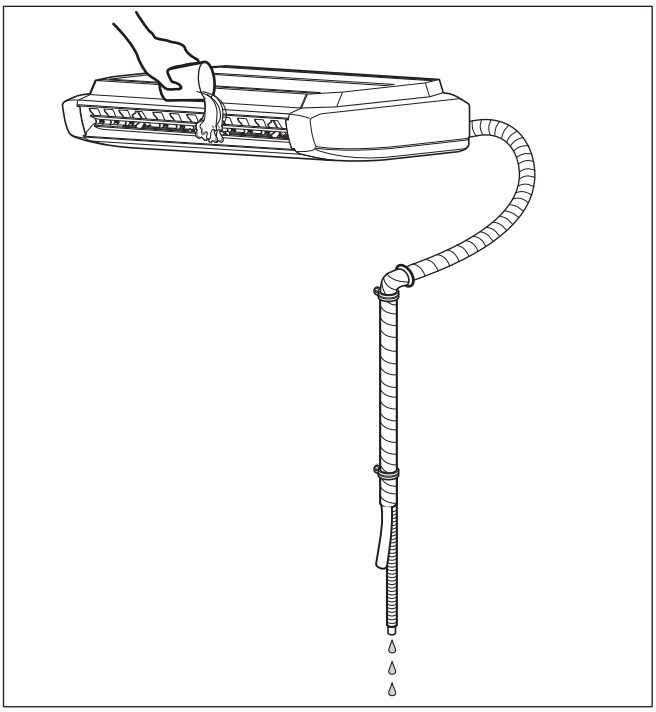

To check the drainage.

1. Pour a glass of water on the evaporator using a kettle.
2. Ensure the water flows through the drain hose of the indoor unit without any leakage and goes out the drain exit.

Drain piping

1. The drain hose should point downward for easy drain flow.

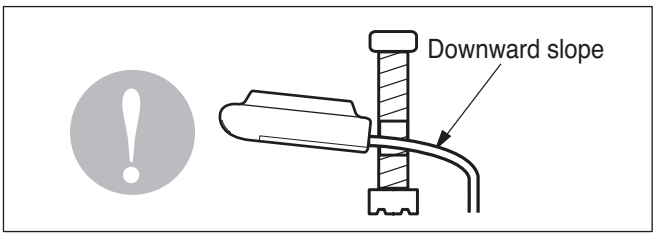

2. Do not make drain piping like the following.

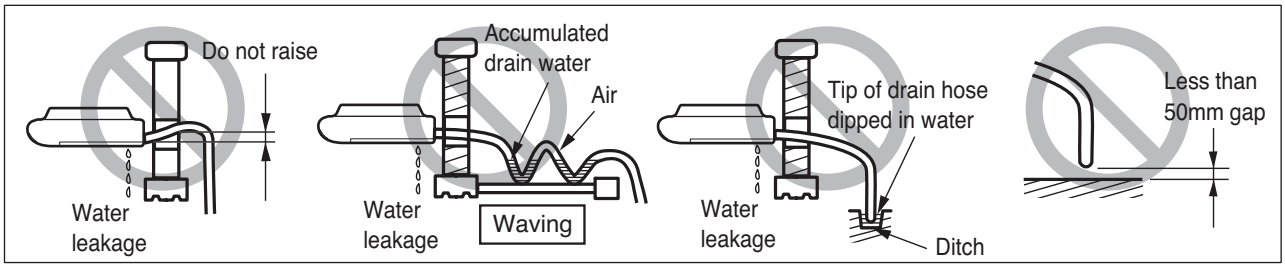

3. While merging numerous drain pipes, follow the procedure mentioned below.

Drain piping must have down-slope (1/50 to 1/100): be sure not to provide up-and-down slope to prevent reversal flow.

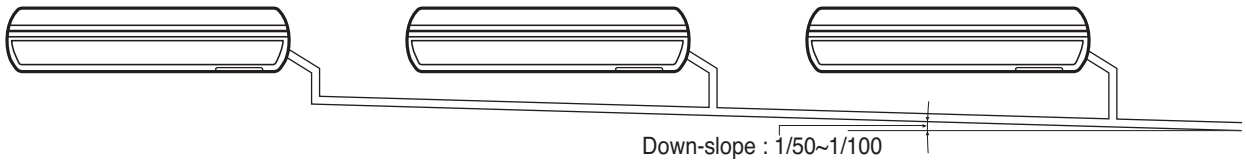

10.13 Wiring Connection

Connect the wires to the terminals on the control board individually according to the outdoor unit connection.

- Ensure that the color of the wires of outdoor unit and the terminal No. are the same as those of indoor unit respectively.

[Multi V III Heat Pump Model]

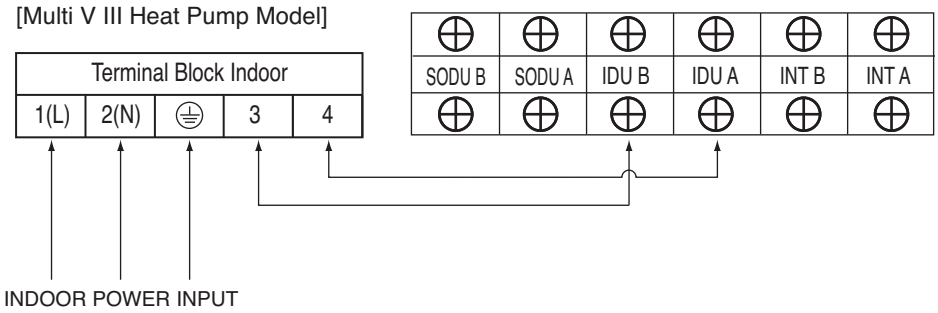

[Except Multi VIII Heat Pump Model]

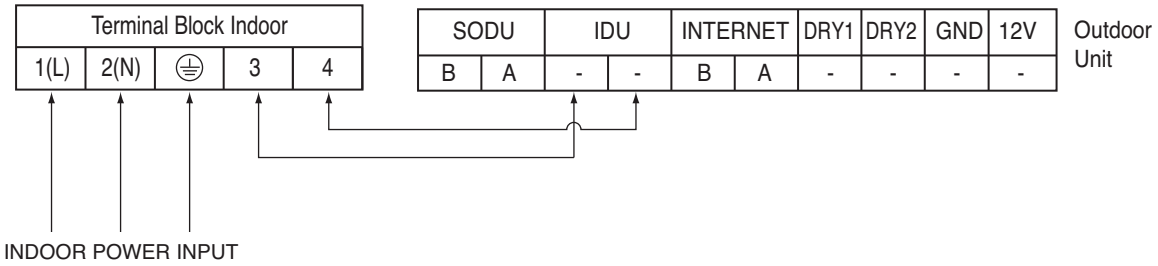

WARNING : Make sure that the screws of the terminal are free from looseness.

10. Installation

CAUTION:

After the confirmation of the above conditions, prepare the wiring as follows:

1) Never fail to have a separate power circuit specially for the air conditioner. As for the method of wiring, follow the circuit diagram posted on the inside of control box cover.

2) Provide a circuit breaker switch between power source and the unit.

3) The screws which fasten the wiring in the casing of electrical fittings are liable to come loose from vibrations to which the unit is subjected during the course of transportation. Check them and make sure that they are all tightly fastened. (If they are loose, it could give rise to burn-out of the wires.)

4) Specification of power source

5) Confirm that electrical capacity is sufficient.

6) Be sure that the starting voltage is maintained at more than 90 percent of the rated voltage marked on the name plate.

7) Confirm that the cable thickness is as specified in the power sources specification. (Particularly note the relation between cable length and thickness.)

8) Never fail to equip a leakage breaker where it is wet or moist.

9) The following troubles would be caused by voltage drop-down.

- Vibration of a magnetic switch, damage on the contact point, fuse breaking, disturbance by the normal function of an overload protection device.
- Proper starting power is not given to the compressor.

WIRED REMOTE CONTROLLER INSTALLATION

• Since the room temperature sensor is in the remote controller, the remote controller box should be installed in a place away from direct sunlight, high humidity and direct supply of cold air to maintain proper space temperature.
Install the remote controller about 5ft(1.5m) above the floor in an area with good air circulation at an average temperature.

Do not install the remote controller where it can be affected by:

- Drafts, or dead spots behind doors and in corners.
- Hot or cold air from ducts.
- Radiant heat from sun or appliances.
- Concealed pipes and chimneys.
- Uncontrolled areas such as an outside wall behind the remote controller.
- This remote controller is equipped with a seven segment LED. display. For proper display of the remote controller LED's, the remote controller should be installed properly as shown in Fig.1.
(The standard height is 1.2~1.5 m from floor level.)

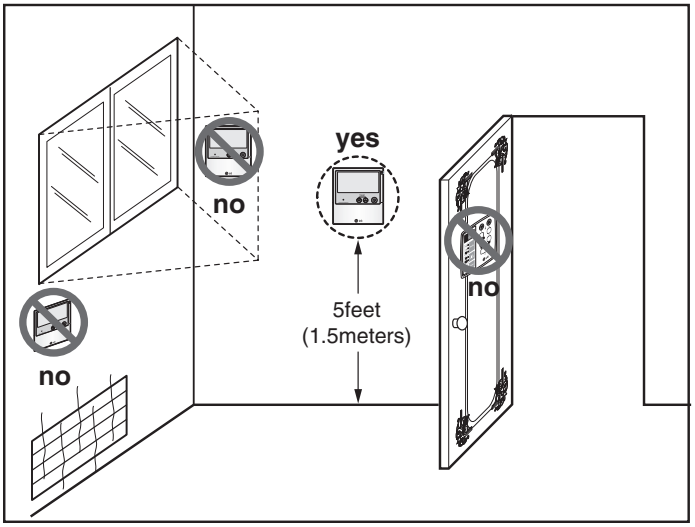

Fig.1 Typical locations for remote controller

11. Accessories

Standard Accessories

Name	Installation plate	Type "A" screw and plastic anchor	(Other)
Quantity	1EA	4EA	• Owner's manual • Installation manual
Shape	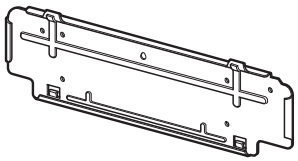		

⚠ CAUTION

• Use only those accessories (Standard or optional) which have designated specifications.